ORDER NO. KM79903264C1

F7

Service Manual

Compact Plain Paper FAX

KX-FP105

(for U.S.A.)

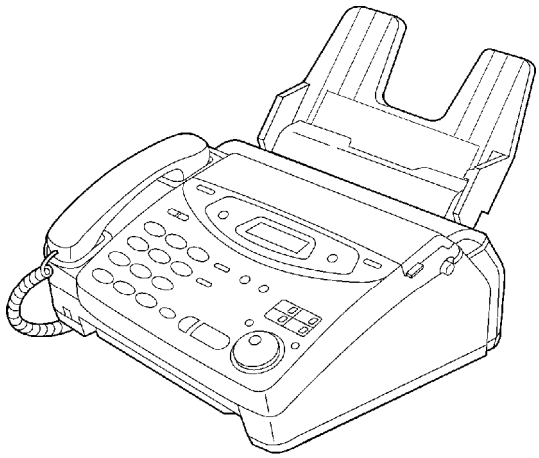

SPECIFICATIONS

⚠ WARNING

This service information is designed for experienced repair technicians only and is not designed for use by the general public.
It does not contain warnings or cautions to advise non-technical individuals of potential dangers in attempting to service a product.
Products powered by electricity should be serviced or repaired only by experienced professional technicians. Any attempt to service or repair the product or products dealt with in this service information by anyone else could result in serious injury or death.

Panasonic®

When you note the serial number,write down all 11 digitals. The serial number may be found on the bottom of the unit.

1. INTRODUCTION

1.1. SAFETY PRECAUTIONS

1. **Before servicing, unplug the AC power cord to prevent an electric shock.**
2. **When replacing parts, use only the manufacturer's recommended components.**
3. **Check the condition of the power cord. Replace if wear or damage is evident.**
4. **After servicing, be sure to restore the lead dress, insulation barriers, insulation papers, shields, etc.**
5. **Before returning the serviced equipment to the customer, be sure to perform the following insulation resistance test to prevent the customer from being exposed to shock hazards.**

1.2. INSULATION RESISTANCE TEST

1. **Unplug the power cord and short the two prongs of the plug with a jumper wire.**
2. **Turn on the power switch.**
3. **Measure the resistance value with an ohmmeter between the jumpered AC plug and each exposed metal cabinet part (screwheads, control shafts, bottom frame, etc.).**
   Note: Some exposed parts may be isolated from the chassis by design. These will read infinity.
4. **If the measurement is outside the specified limits, there is a possibility of a shock hazard.**

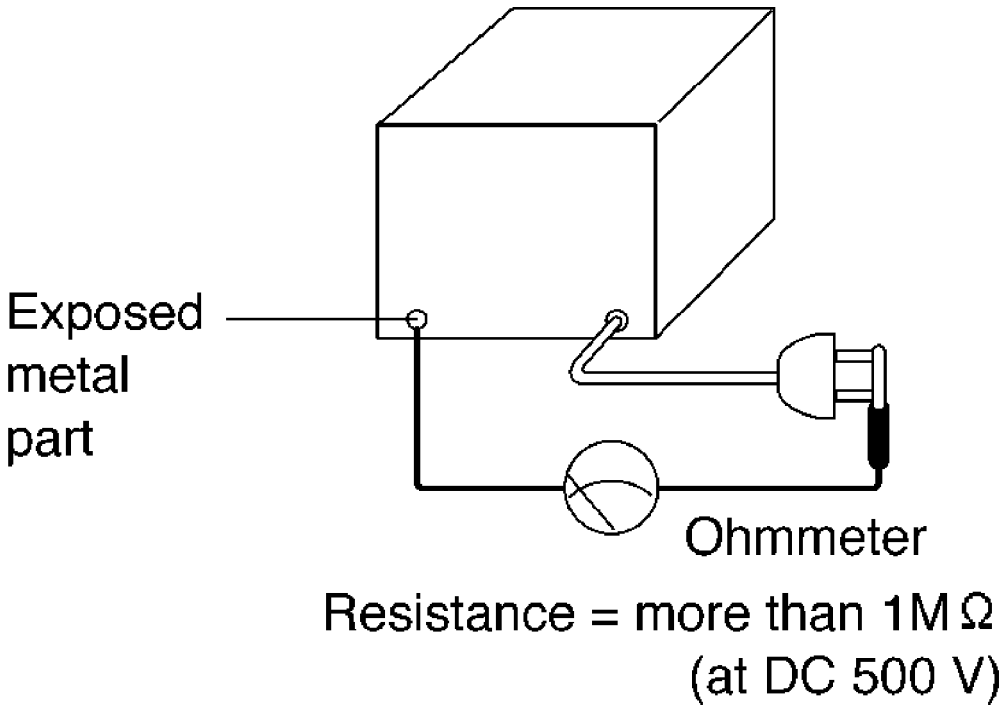

1.3. FOR SERVICE TECHNICIANS

ICs and LSIs are vulnerable to static electricity.
When repairing, the following precautions will help prevent recurring malfunctions.

1. Cover the plastic part's boxes with aluminum foil.

2. Ground the soldering irons.

3. Use a conductive mat on the worktable.

4. Do not touch the IC or LSI pins with bare fingers.

1.4. BATTERY CAUTION

CAUTION

Danger of explosion if the battery is replaced incorrectly. Replace only with the same or equivalent type recommended by the manufacturer. Discard used batteries according to following caution:
Disposal of lithium batteries should be performed by permitted, professional disposal firms knowledgeable in state government federal and local hazardous materials and hazardous waste transportation and disposal requirements.
A battery continues to have no transportation limitations as long as it is separated to prevent short circuits and packed in strong packaging.
Commercial firms that dispose of any quantity of lithium cells

should have a mechanism in place to account for their ultimate disposition. This is a good practice for all types of commercial or industrial waste.

Recommend Type Number:

CR2032 (BATT) Manufactured by MATSUSHITA

CR2032 (BATT) Manufactured by SONY

1.5. AC CAUTION

For safety, before closing the lower cabinet, please make sure of the following precautions.

1. The earth lead is fixed with the screw.

2. The AC connector is connected properly.

3. Wrap the earth lead around the core 3 times.

(Bottom View)

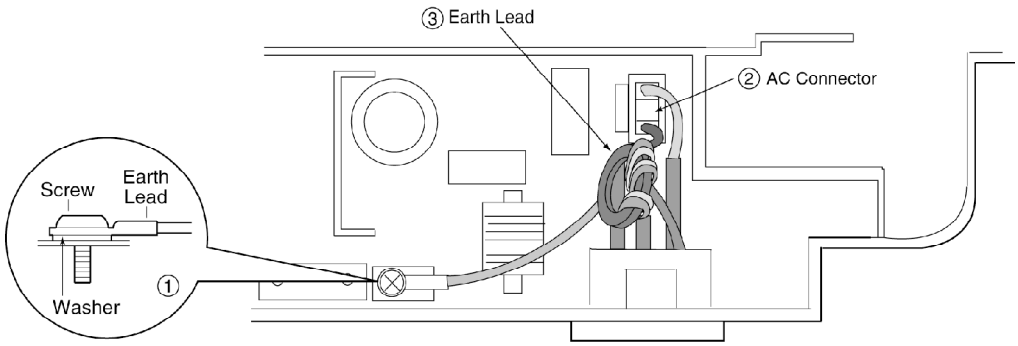

1.6. PERSONAL SAFETY PRECAUTIONS

1.6.1. MOVING SECTIONS OF THE UNIT

Be careful not to let your hair, clothes, fingers, accessories, etc., become caught in any moving sections of the unit.

The moving sections of the unit are the rollers and a gear. There is a separation roller and a document feed roller which are rotated by the document feed motor. A gear rotates the two rollers. Be careful not to touch them with your hands, especially when the unit is operating.

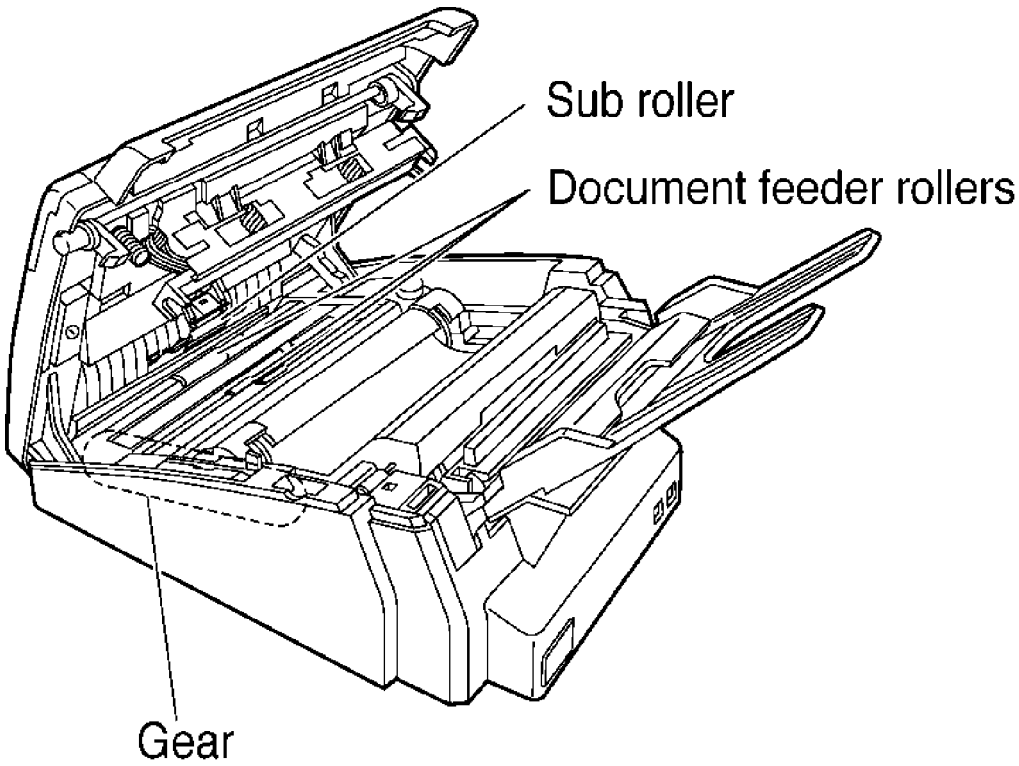

1.6.2. LIVE ELECTRICAL SECTIONS

All the electrical sections of the unit supplied with AC power by the AC power cord are live. Never disassemble the unit for service with the AC power supply plugged in.

CAUTION:

AC voltage is supplied to the primary side of the power supply unit. Therefore, always unplug the AC power cord before disassembling for service.

(Bottom View)

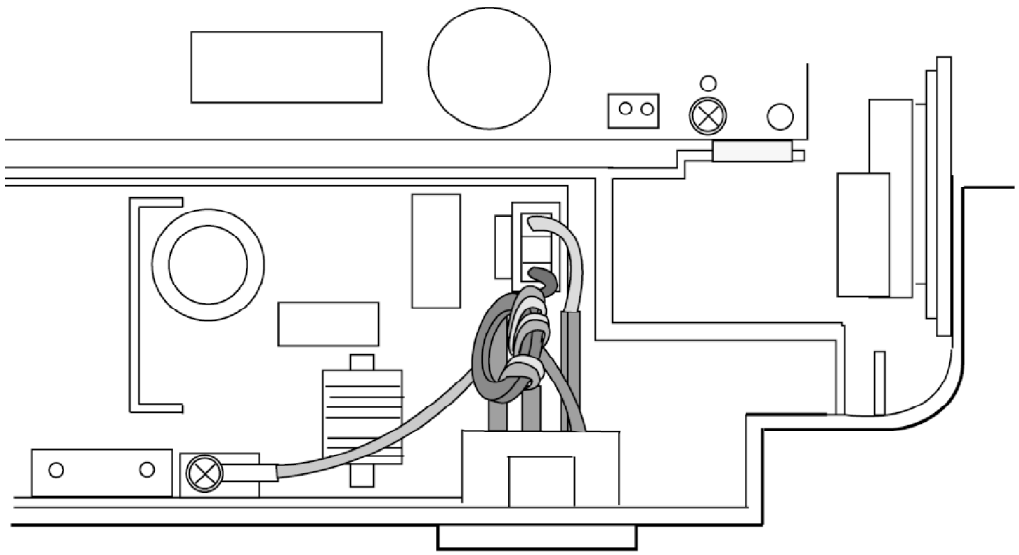

1.7. SERVICE PRECAUTIONS

1.7.1. PRECAUTIONS TO PREVENT DAMAGE FROM STATIC ELECTRICITY

Electrical charges accumulate on a person. For instance, clothes rubbing together can damage electric elements or change their electrical characteristics. In order to prevent static electricity, touch a metallic part that is grounded to release the static electricity. Never touch the electrical sections such as the power supply unit, etc.

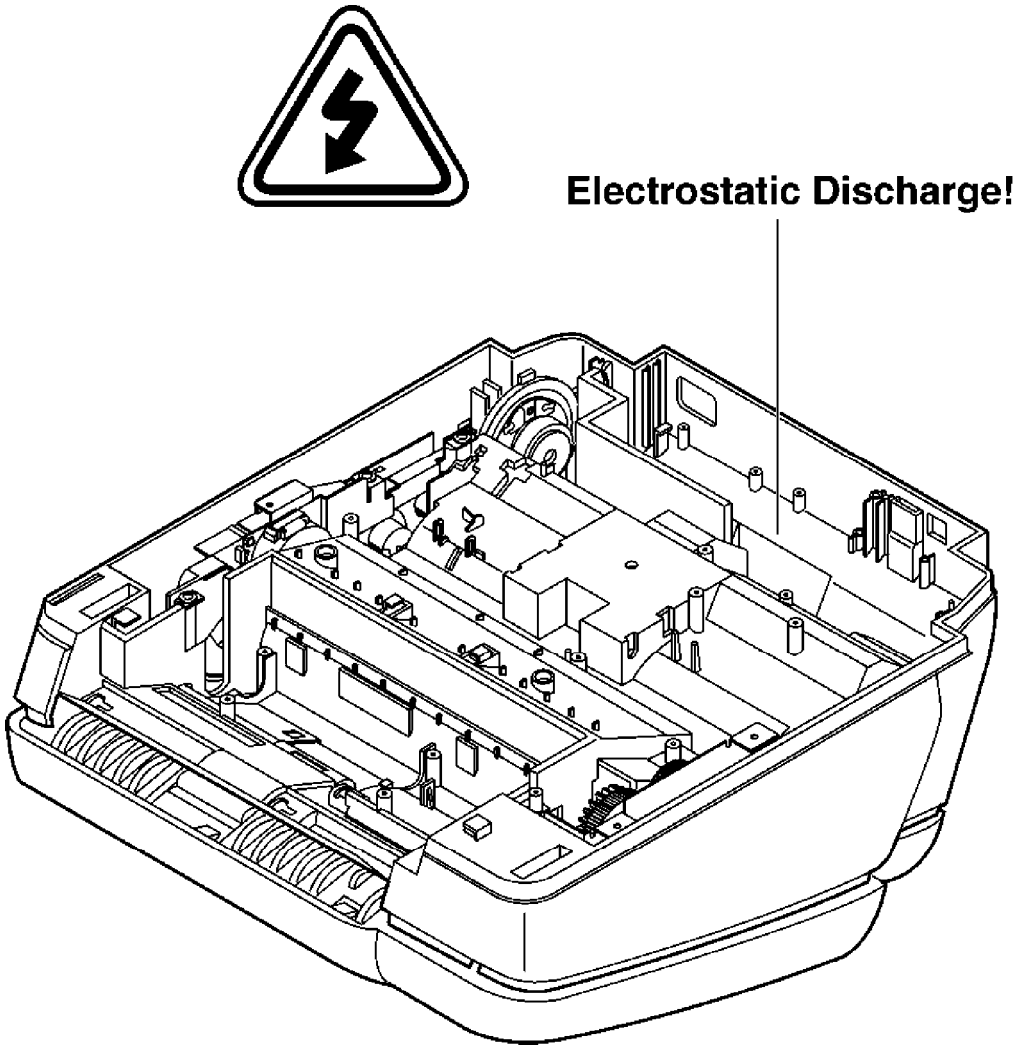

1.8. FEATURES

General

- Help function

Display:

1. HOW TO SET UP
2. JOG/AUTO DIAL
3. FAX SENDING
4. FAX RECEIVING
5. COPIER
6. Q and A

7. ERRORS
8. REPORTS
9. CALLER ID

- LCD (Liquid Crystal Display) readout
- TAM (Telephone answering machine) interface
- IQ-FAX™ (for U.S.A. only)

This feature can only be used by those who apply to the FaxSav service.

IQ-FAX is intelligent faxing which allows you to send faxes via the internet by using the IQ-FAX button.

Behind the IQ-FAX button is the FaxSav Global Fax Network which manages the delivery of your fax to any fax machine in the world. It routes your fax via the best and most time efficient route and will automatically resend your fax for you, if the receiving fax machine is unavailable.

This "fax-only" network has the added advantage of cost efficiency due to the internet being integrated into the net work. Every fax is secure since the FaxSav net work utilizes the highest encryption legally allowed, ensuring that your documents stay secure. You get the benefits of carefree faxing with savings associated with the use of the internet. It is simple, quick, and secure.

Plain Paper Facsimile Machine

- 15 second transmission speed *
- Letter/Legal, G3 compatible
- Automatic document feeder (15 sheets)
- 6 stations one-touch dialer
- Broadcast (up to 20 station) × 3
- Resolution : Standard/Fine/Super fine/Half tone (64 level)
- LCD Contrast : Normal/Darker
- Delayed transmission
- Overseas transmission function
- Remote FAX receiving using an extension phone
- 150-sheet paper capacity
- Automatic fax/phone switching
- Distinctive ring detection **
- Caller ID

*** The 15 second speed is based upon the CCITT No. 1 Test Chart on the condition that memory**

transmission is performed.
**** Subscription to distinctive ring services required.**

Large Memory (28 pages) Performed by DRAM
Approx. 28 pages of memory reception
Approx. 25 pages of memory transmission

Integrated Telephone System
- **On-hook dialing**
- **Monitor**
- **Voice muting**
- **Redialing function**
- **100-Station telephone directory with Jog Dial**

Copier function
- **Multi-copy function (up to 99 copies)**
- **Enlargement and reduction**
- **Collate**
- **64-Level halftone**
- **Electronic film indicator**

1.9. SPECIFICATIONS

[These specifications are for the U.S.A. version only. Refer to the simplified manual (cover) for other areas.]

Applicable Lines:

Public Switched Telephone Network

Document Size:

Max. 216 mm (8 1/2") in width
Max. 600 mm (23 5/8") in length

Effective Scanning Width:

208 mm (8 3/16")

Recording Paper Size:

Letter: 216×279 mm (8 1/2"×11")
Legal: 216×356 mm (8 1/2"×14")

Effective Printing Width:

208 mm (8 3/16")

Transmission Time*:

Approx. 15 sec./page (Original mode)**

Scanning Density:

Horizontal:
8 pels/mm (203 pels/inch)
Vertical:
3.85 lines/mm (98 lines/inch)—STANDARD mode
7.7 lines/mm (196 lines/inch)—FINE/HALF TONE mode
15.4 lines/mm (392 lines/inch)—SUPER FINE Mode

Halftone Level:
64-level

Scanner Type:
Contact Image Sensor (CIS)

Printer Type:
Thermal Printing

Data Compression System:
Modified Huffman (MH), Modified READ (MR)

Modem Speed:
9,600/7,200/4,800/2,400 bps; Automatic Fallback

Operating Environment:
5—35°C (41—95°F), 20—80 % RH(Relative Humidity)

Dimensions (H×W×D):
143×325×305 mm (5 5/8"×12 13/16"×12")

Mass (Weight):
Approx. 4.0 kg (8.8 lb.)

Power Consumption:
Standby: Approx. 4.0 W
Transmission: Approx. 18 W
Reception: Approx. 39 W (When receiving a 20% black document)
Copy: Approx. 48 W (When copying a 20% black document)
Maximum: Approx. 160 W (When copying a 100% black document)

Power Supply:
120 V AC, 60 Hz (This unit will not function at 50 Hz.)

Memory Capacity:
Approx. 28 pages memory reception
Approx. 25 pages memory transmission

(Based on CCITT No. 1 Test Chart in standard resolution.)

*** Transmission speed depends upon the contents of the pages, resolution, telephone line conditions and capability of the receiving unit.**

**** The 15 second speed is based upon the CCITT No. 1 Test Chart and original mode. (Refer to "1.11. CCITT No. 1 Test Chart".) If the capability of the other party's machine is inferior to your unit, the transmission time may be longer.**

Note:

- **Any details given in these instructions are subject to change without notice.**
- **The pictures and illustrations in these instructions may vary slightly from the actual product.**

Design and specifications are subject to change without notice.

1.10. OPTIONAL ACCESSORIES

Model No.	Description	Specifications
KX-FA65	Film cartridge	216 mm x 100 m (8½" x 328') roll
PFZXFP101M	Paper stacker	Used to stack printed paper.

1.11. CCITT No. 1 Test Chart (Actual size)

THE SLEREXE COMPANY LIMITED
SAPORS LANE - BOOLE - DORSET - BH 25 8 ER
TELEPHONE BOOLE (945 13) 51617 - TELEX 123456

Our Ref. 350/PJC/EAC 18th January, 1972.

Dr. P.N. Cundall,
Mining Surveys Ltd.,
Holroyd Road,
Reading,
Berks.

Dear Pete,

Permit me to introduce you to the facility of facsimile transmission.

In facsimile a photocell is caused to perform a raster scan over the subject copy. The variations of print density on the document cause the photocell to generate an analogous electrical video signal. This signal is used to modulate a carrier, which is transmitted to a remote destination over a radio or cable communications link.

At the remote terminal, demodulation reconstructs the video signal, which is used to modulate the density of print produced by a printing device. This device is scanning in a raster scan synchronised with that at the transmitting terminal. As a result, a facsimile copy of the subject document is produced.

Probably you have uses for this facility in your organisation.

Yours sincerely,

Phil.

P.J. CROSS
Group Leader - Facsimile Research

Registered in England: No. 2038
Registered Office: 60 Vicara Lane, Ilford. Essex.

1.12. LOCATION OF CONTROLS

1.12.1. OVERVIEW

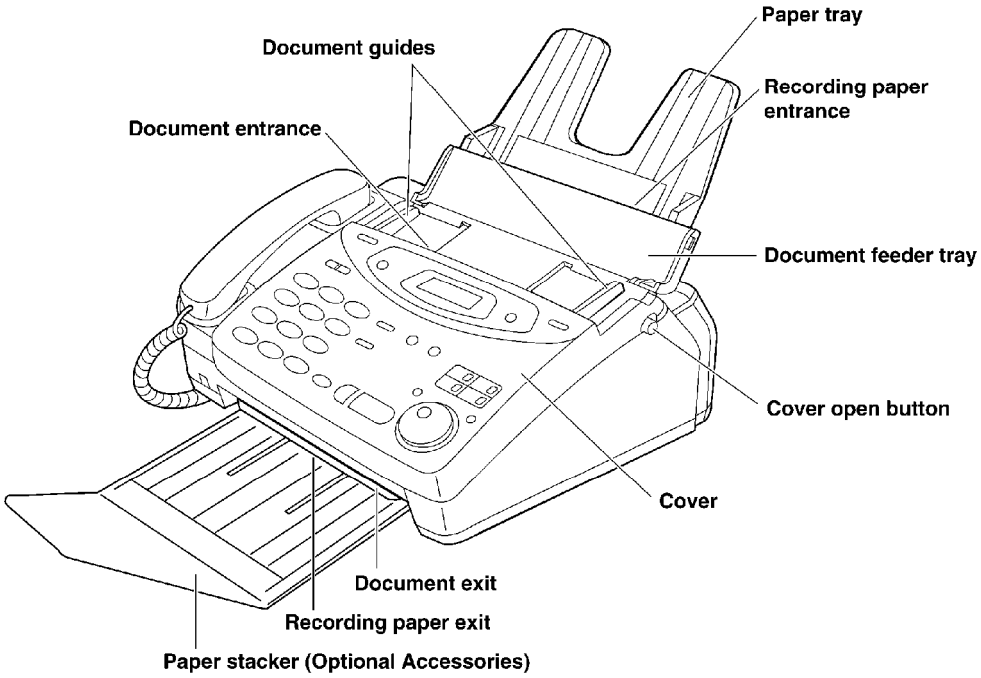

Note:

- The document and recording paper will be ejected from the front of the unit. Do not put anything in front of the unit.

1.12.2. CONTROL PANEL

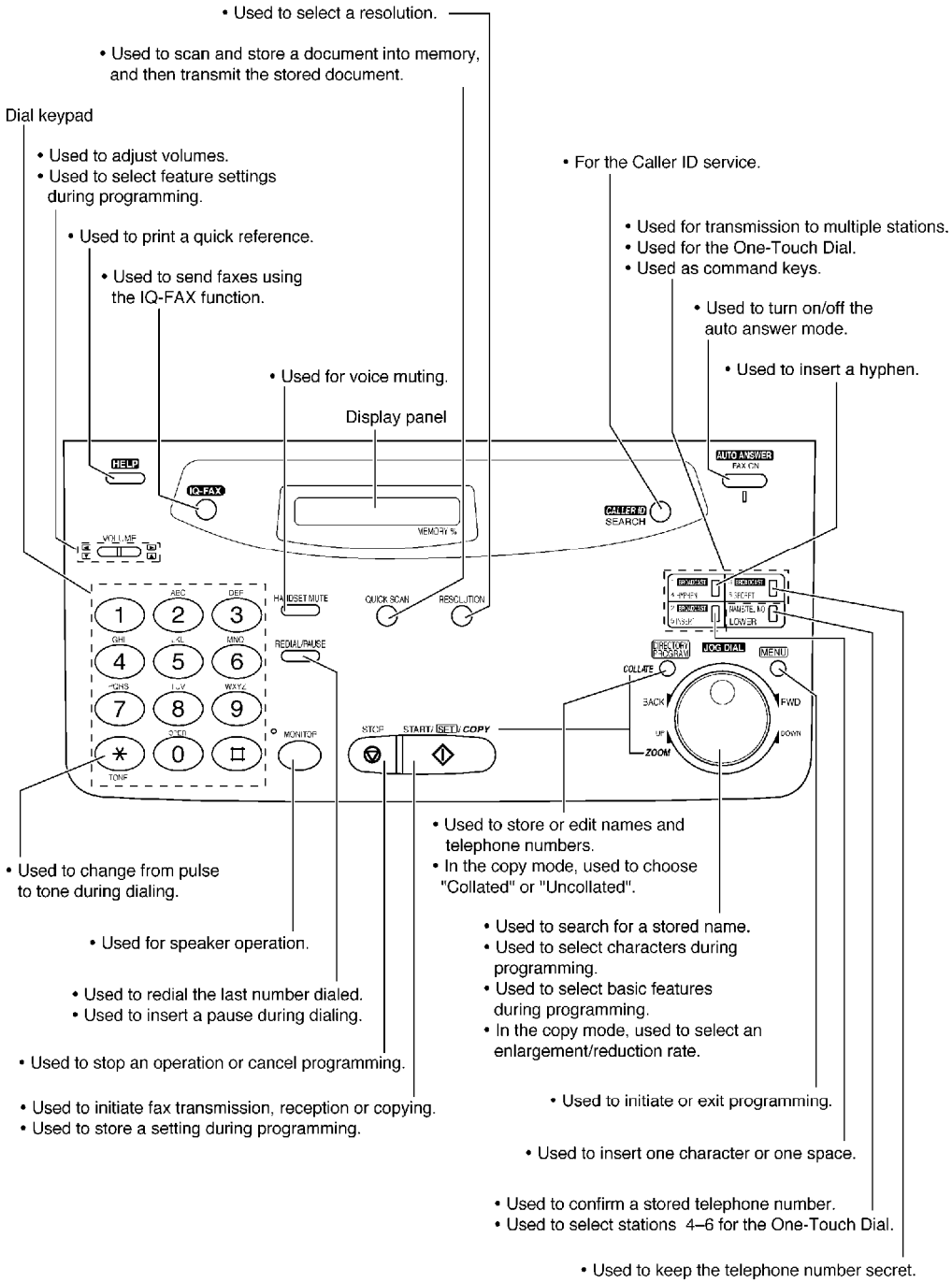

1.13. CONNECTIONS

[This connection is for the U.S.A. version only. Refer to the simplified manual (cover) for other areas.]

1.14. INSTALLATION

1.14.1. INSTALLATION SPACE

The space required to install the unit is shown below.
The dimensions given are necessary for the unit to operate efficiently.

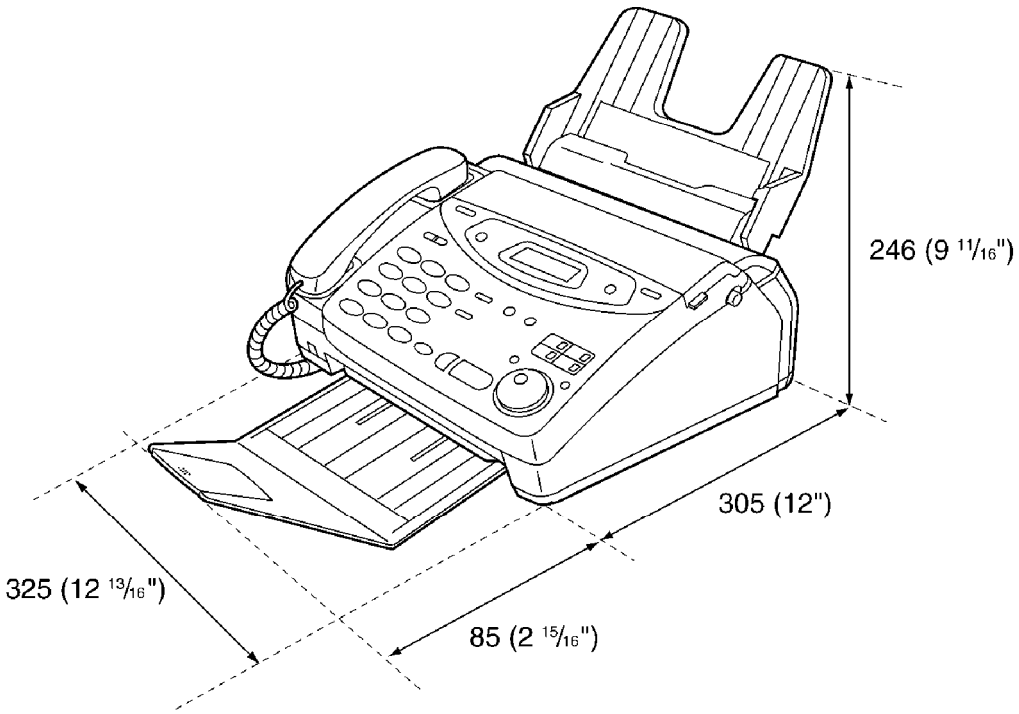

Note:

- **Avoid excessive heat or humidity.**
- **Use the unit within the following ranges of temperature and humidity.**
- **Ambient temperature: 5°C to 35°C**
- **Relative humidity: 20% to 80% (without condensation)**
- **Power cord length should be less than 5 meters (16.4 feet). Using a longer cord may reduce the voltage or cause malfunctions.**
- **Avoid direct sunlight.**
- **Do not install near devices which contain magnets or generate magnetic fields.**
- **Do not subject the unit to strong physical shock or vibration.**
- **Keep the unit clean. Dust accumulation can prevent the unit from functioning properly.**
- **To protect the unit from damage, hold both sides when you move it.**

1.14.2. INSTALLING THE PAPER STACKER

(Refer to 1.10. OPERATIONAL ACCESSORIES.)

1.14.3. USING LEGAL SIZE PAPER

1.14.4. INSTALLING THE PAPER TRAY

1.14.5. INSTALLING THE RECORDING PAPER

Note:

- **Avoid paper with a cotton and/or fiber content that is over 20%, such as letterhead paper or those used for resumes.**
- **Do not use different types or thicknesses of paper in the cassette at the same time. This may cause a paper jam.**
- **Avoid extremely smooth or shiny paper that is highly textured. Also avoid paper that is coated, damaged or wrinkled.**
- **Avoid double-sided printing.**
- **Do not use paper printed from this unit for double-sided printing with other copiers or printers, or the papermay jam.**

1.14.6. ADDING PAPER TO THE PAPER TRAY

1.14.7. DOCUMENTS THE UNIT CAN FEED

1.14.8. SETTING YOUR LOGO

1.14.9. TO SELECT CHARACTERS WITH THE DIAL KEYPAD

Pressing the dial keys will select a character as shown below.

Keys		Characters
Dial keys	(1)	1 [ ] { } + − / = , . _ ` : ; ? !
	(2)	A B C a b c 2
	(3)	D E F d e f 3
	(4)	G H I g h i 4
	(5)	J K L j k l 5
	(6)	M N O m n o 6
	(7)	P Q R S p q r s 7
	(8)	T U V t u v 8
	(9)	W X Y Z w x y z 9
	(0)	0 ( ) 〈 〉 ! " # $ % & ¥ * @ ^ ' →
One-Touch Dial keys	[1]	**HYPHEN** key (Used to insert a hyphen.)
	[2]	**INSERT** key (Used to insert one character or one space.)
Arrow keys	◄	◄ key (Used to move the cursor to the left.)
	►	► key (Used to move the cursor to the right.) To enter another character using the same number key, move the cursor to the next space.

Note: A hyphen entered in a telephone number is counted as two digits.

1.14.10. TO SELECT CHARACTERS USING THE JOG DIAL

1.14.11. REPLACING THE FILM CARTRIDGE

1.15. MAINTENANCE ITEMS AND COMPONENT LOCATIONS

1.15.1. OUTLINE

MAINTENANCE AND REPAIRS ARE PERFORMED USING THE FOLLOWING STEPS.

1. **Periodic maintenance**
   Inspect the equipment periodically and if necessary, clean any contaminated parts.
2. **Check for breakdowns**
   Look for problems and consider how they arose.
   If the equipment can be still used, perform copying, self testing or communication testing.
3. **Check equipment**
   Perform copying, self testing and communication testing to determine if the problem originates from the transmitter, receiver or the telephone line.
4. **Determine causes**
   Determine the causes of the equipment problem by troubleshooting.
5. **Equipment repairs**
   Repair or replace the defective parts and take appropriate measures at this stage to ensure that the problem will not recur.
6. **Confirm normal operation of the equipment**
   After completing the repairs, conduct copying, self testing and communication testing to confirm that the equipment operates normally.
7. **Record keeping**
   Make a record of the measures taken to rectify the problem for future reference.

1.15.2. MAINTENANCE CHECK ITEMS/COMPONENT LOCATIONS

1.15.2.1. MAINTENANCE LIST

NO.	OPERATION	CHECK	REMARKS
1	Document Path	Remove any foreign matter such as paper.	—
2	Rollers	If the roller is dirty, clean it with a damp cloth then dry thoroughly.	Refer to 1.15 MAINTENAN
3	Platen Roller	If the platen is dirty, clean it with a damp cloth then dry thoroughly. Remove the paper and film cartridge before cleaning.	—
4	Thermal Head	If the thermal head is dirty, clean the printing surface with a cloth moistened with denatured alcohol (alcohol without water), then dry thoroughly.	Refer to 1.15 MAINTENAN
5	Sensors	Document sensor (PI302), Read position sensor (PI301), Hook switch (SW401), Paper top sensor (PI402), Film end sensor (PI403), Cover open sensor (PI303) and Paper set switch (SW101). Confirm the operation of the sensors.	See 1.15.3. MAINTENAN 4. DISASSEM INSTRUCTIC
6	Glass, White Plate	If the glass and the white plate are dirty, clean them with a dry soft cloth.	Refer to 1.15 MAINTENAN CHECK ITEM COMPONEN LOCATIONS
7	Mirrors and Lens	If the mirrors and lens are dirty, clean them with a soft dry cloth.	—
8	Abnormal, wear and tear or loose parts	Replace the part. Check if the screws are tight on all parts.	—

1.15.2.2. MAINTENANCE CYCLE

No.	Item	Cleaning Cycle	Replacement	
			Cycle	Procedure
1	Separation Roller (Ref. No. 173)	3 months	7 years* (100,000 documents)	Refer to 4. DISASSEMBLY INSTRUCTIONS.
2	Separation Rubber (Ref. No. 44)	3 months	7 years (100,000 documents)	Refer to 1.15.2. MAINTENANCE CHECK ITEM/ COMPONENT LOCATIONS.
3	Feed Rollers (Ref. No. 109)	3 months	7 years (100,000 documents)	Refer to 4. DISASSEMBLY INSTRUCTIONS.
4	Thermal Head (Ref. No. 51)	3 months	7 years (100,000 documents)	Refer to 4. DISASSEMBLY INSTRUCTIONS.
5	Platen Roller (Ref. No. 102)	3 months	7 years (100,000 documents)	Refer to 4. DISASSEMBLY INSTRUCTIONS.

No.	Item	Cleaning Cycle	Replacement	
			Cycle	Procedure
6	Pickup Roller (Ref. No. 134)	3 months	7 years (100,000 documents)	Refer to 4. DISASSEMBLY INSTRUCTIONS.

1.15.3. MAINTENANCE

1.15.3.1. CLEANING THE DOCUMENT FEEDER UNIT

1.15.3.2. CLEANING THE THERMAL HEAD AND BLACK BAR

1.15.3.3. CLEANING THE PICKUP ROLLER

If misfeeding occurs frequently or if spots or black bands appear on a copied or received paper, clean the Pickup roller.

2. TROUBLESHOOTING GUIDE

2.1. TROUBLESHOOTING SUMMARY

2.1.1. TROUBLESHOOTING

After confirming the problem by asking the user, troubleshoot according to the instructions and observe the following precautions.

2.1.2. PRECAUTIONS

1. **If there is a problem with the print quality or the paper feed, first check if the installation space and the print paper meets the specifications, the paper selection lever/paper thickness lever is set correctly, and the paper is set correctly without any slack.**
2. **Before troubleshooting, first check that the connectors and cables are connected correctly (not loose).**
   If the problem occurs randomly, check it very carefully.
3. **When connecting the AC power cord with the unit and checking the operation, exercise utmost care when handling electric parts in order to avoid electric shocks and short-circuits.**
4. **After troubleshooting, double check that you have not forgotten any connectors, left any loose screws, etc.**
5. **Always test to verify that the unit is working normally.**

2.1.3. WHEN YOU DON'T KNOW HOW TO OPERATE THE UNIT, USE THE HELP FUNCTION

• How to use:

1. Press [HELP].
2. Press [▲] or [▼] until the desired item is displayed.
3. Press [START/SET/COPY].

2.2. USER RECOVERABLE ERRORS

If the unit detects a problem, one or more of the following messages will appear on the display.

Note:
The explanations given in the [ ] are for servicemen only.

2.2.1. PAPER JAM

2.2.2. RECORDING PAPER JAMS

2.3. TROUBLESHOOTING DETAILS

2.3.1. OUTLINE

Troubleshooting is for recovering quality and reliability by determining the broken component and replacing, adjusting or cleaning it as required. First, determine the problem then decide the troubleshooting method. If you have difficulty finding the broken part, determine which board is broken. (For example: the Digital PCB, Analog PCB, etc.) The claim tag from a customer or dealer may use different expressions for the same problem, as they are not a technician or engineer. Using your experience, test the problem area corresponding to the claim. Also, returns from a customer or dealer often have a claim tag. For these cases as well, you need to determine the problem. Test the unit using the simple check list on 2.3.3.1. Simple Check List. Difficult problems may be hard to determine, so repeated testing is necessary.

2.3.2. STARTING TROUBLESHOOTING

Determine the symptom and the troubleshooting method.

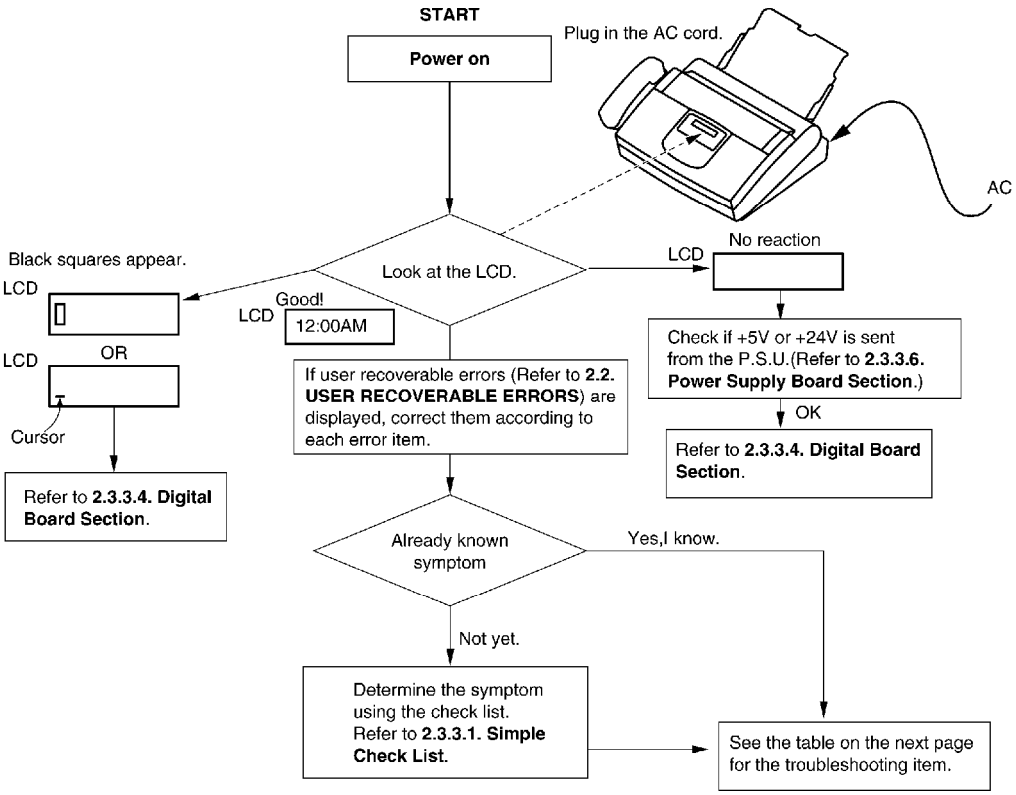

2.3.3. TROUBLESHOOTING ITEMS TABLE

ITEM	SYMPTOM	REFERENCE
ADF (Auto Document Feeder)	The document does not feed. Document jam Multiple feed Skew	See **2.3.3.2. ADF (Auto document feed) Section**.
Recording paper feed	The recording paper does not feed. Paper jam Multiple feed and skew	See **2.3.3.2. ADF (Auto document feed) Section**.
Printing	The sent fax data is skewed. The received fax data is skewed. The received or copied data is expanded. A blank page is copied. A blank page is received. Black or white vertical line Black or white lateral line An abnormal image is printed.	See **2.3.3.2. ADF (Auto document feed) Section**.
Communication FAX, TEL (analog board)	Cannot communicate by fax. An error code is displayed.	See **2.3.3.3. Communication Section**.
	Cannot talk. The DTMF tone doesn't work. The handset/monitor doesn't work, etc.	See **2.3.3.5. Analog Board Section**.
Operation panel	Keys are not accepted.	See **2.3.3.7. Operation Panel Section**.
Sensor	If the electric circuit is the cause, the error message corresponding to the sensor will be displayed.	See **2.3.3.8. Sensor Board Section**.

2.3.3.1. Simple Check List

SERIAL NO. _____ DATE _____

FUNCTION		JUDGEMENT	REFERENCE
FAX operaton	Transmission	OK / NG	
	Receiving	OK / NG	
Copy operation		OK / NG	
Telephone operation	Handset transceiver/ receiver	OK / NG	
	SP-PHONE sound	OK / NG	
	Ringer sound	OK / NG	
	Dial operation	OK / NG	
	Volume operation	OK / NG	
	VOX detection	OK / NG	Service code 815※
Operation panel	Key check	OK / NG	Service code 561※
	LED check	OK / NG	Service code 557※
	LCD check	OK / NG	Service code 558※
Sensor	Sensor check	OK / NG	Service code 815※
Clock	Sensor check	OK / NG	Is the time kept correctly? Check with another clock.
EXT-TAM	Handset transceiver/receiver	OK / NG	
	Remote control	OK / NG	

※Check according to the service code referring to **2.5. TEST FUNCTIONS**.

2.3.3.2. ADF (Auto document feed) section

1. No document feed

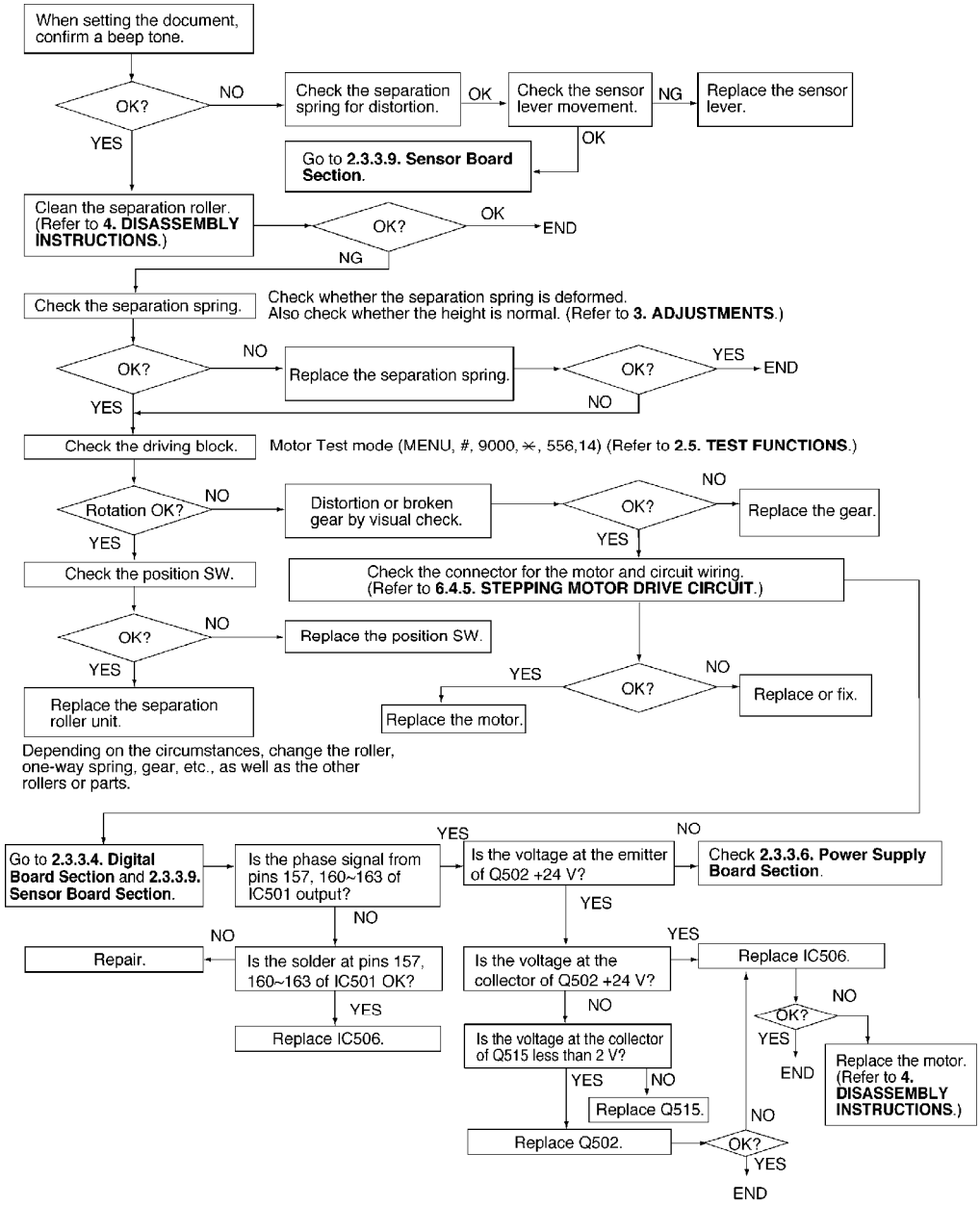

Note:

When using thin paper etc., sometimes the document will not feed. Refer to 3.2. ADJUSTING THE FEEDER PRESSURE.

2. Document JAM

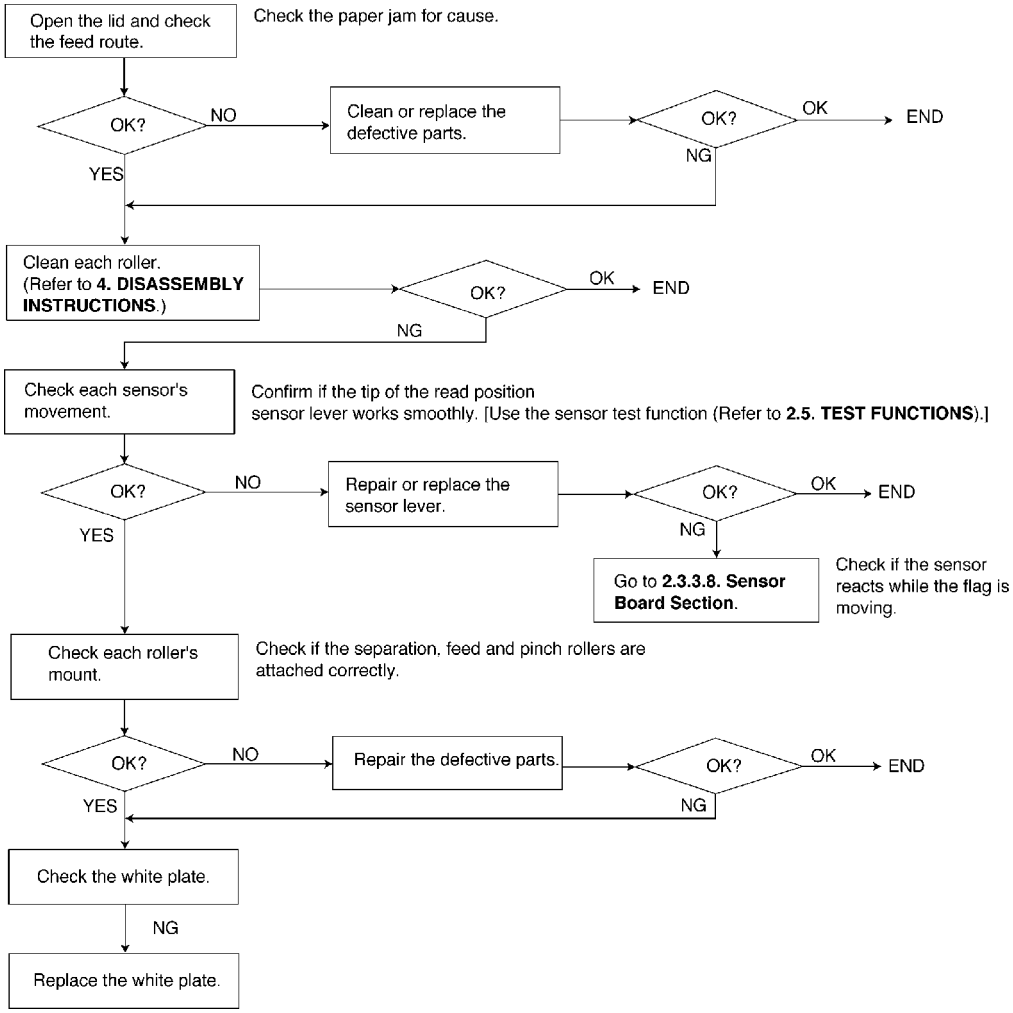

3. Multiple feed

- When using thick paper etc., sometimes the document will not be fed.
Refer to 3.2. ADJUSTING THE FEEDER PRESSURE.

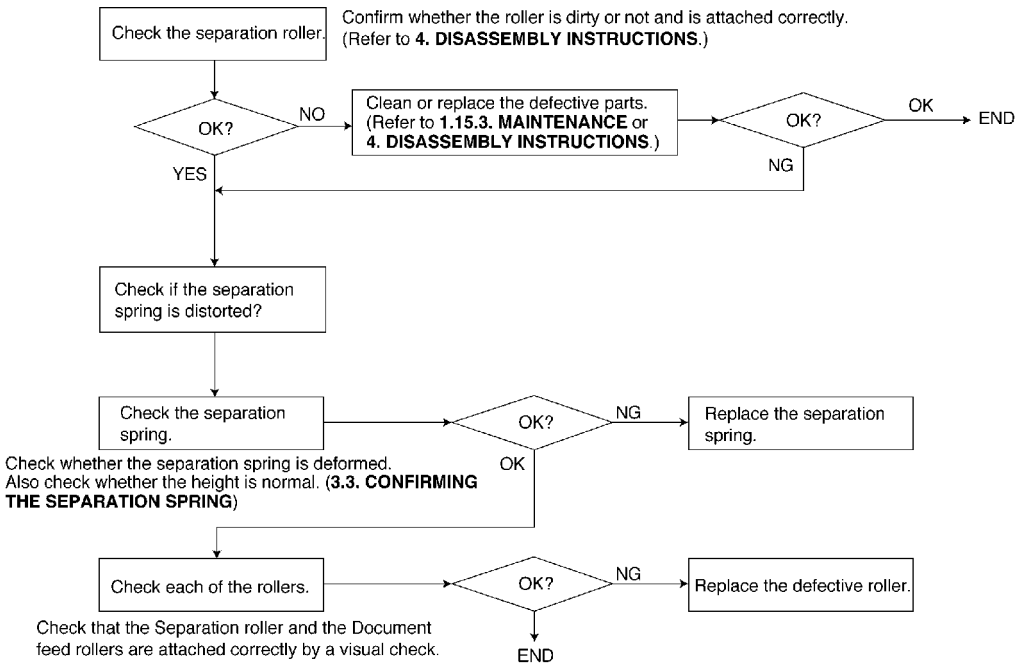
Check the separation roller.
Confirm whether the roller is dirty or not and is attached correctly.
(Refer to 4. DISASSEMBLY INSTRUCTIONS.)
OK?
NO
YES
Clean or replace the defective parts.
(Refer to 1.15.3. MAINTENANCE or
4. DISASSEMBLY INSTRUCTIONS.)
OK?
OK
END
NG
Check if the separation spring is distorted?
Check the separation spring.
OK?
NG
Replace the separation spring.
Check whether the separation spring is deformed.
Also check whether the height is normal. (3.3. CONFIRMING THE SEPARATION SPRING)
OK
Check each of the rollers.
OK?
NG
Replace the defective roller.
Check that the Separation roller and the Document feed rollers are attached correctly by a visual check.
END

Fig. B

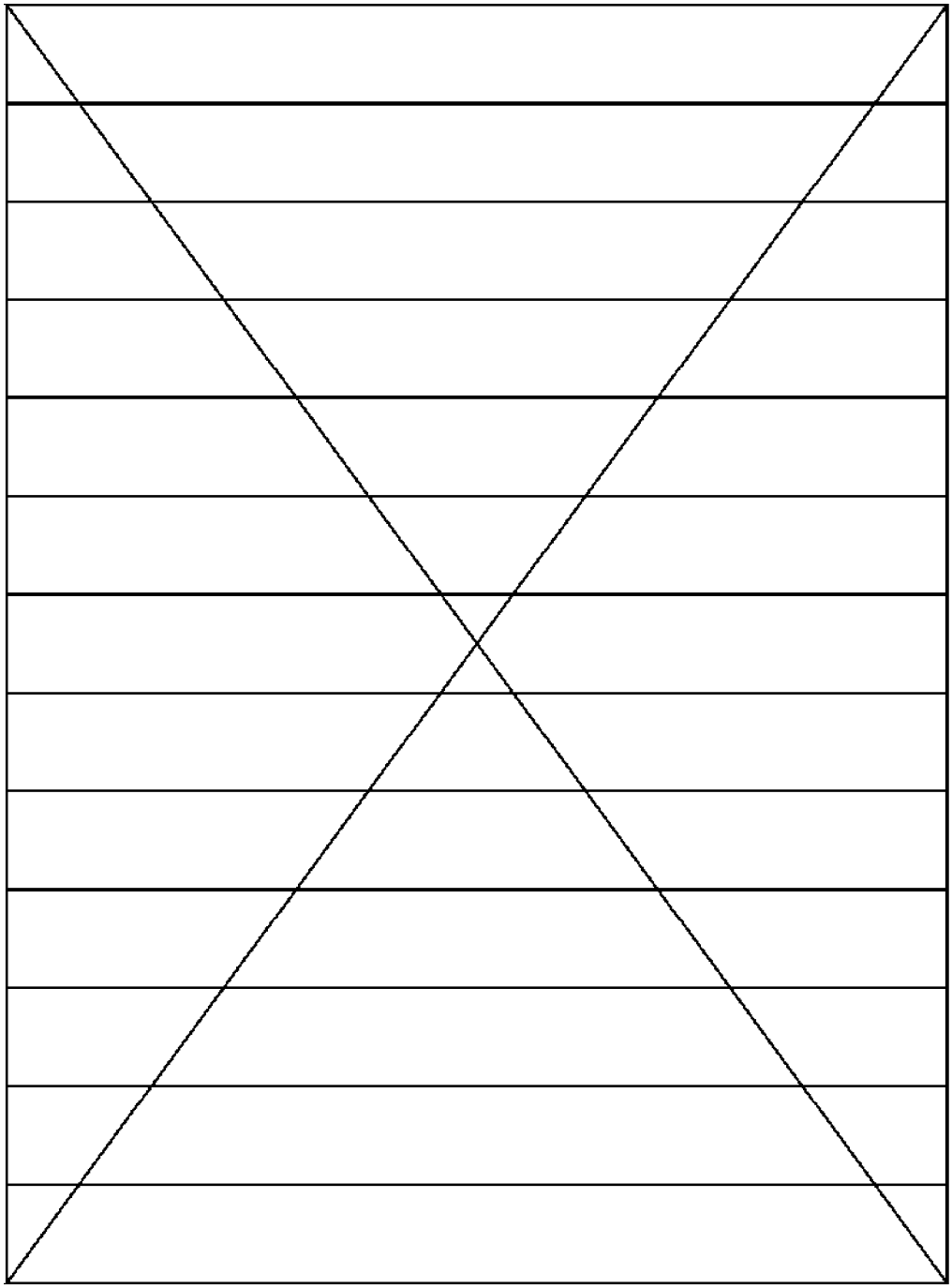

Note:
When confirming if the characters are extended or distorted, or if the feed problem occurs, use this test chart format
(Fig. B).

4. Skew

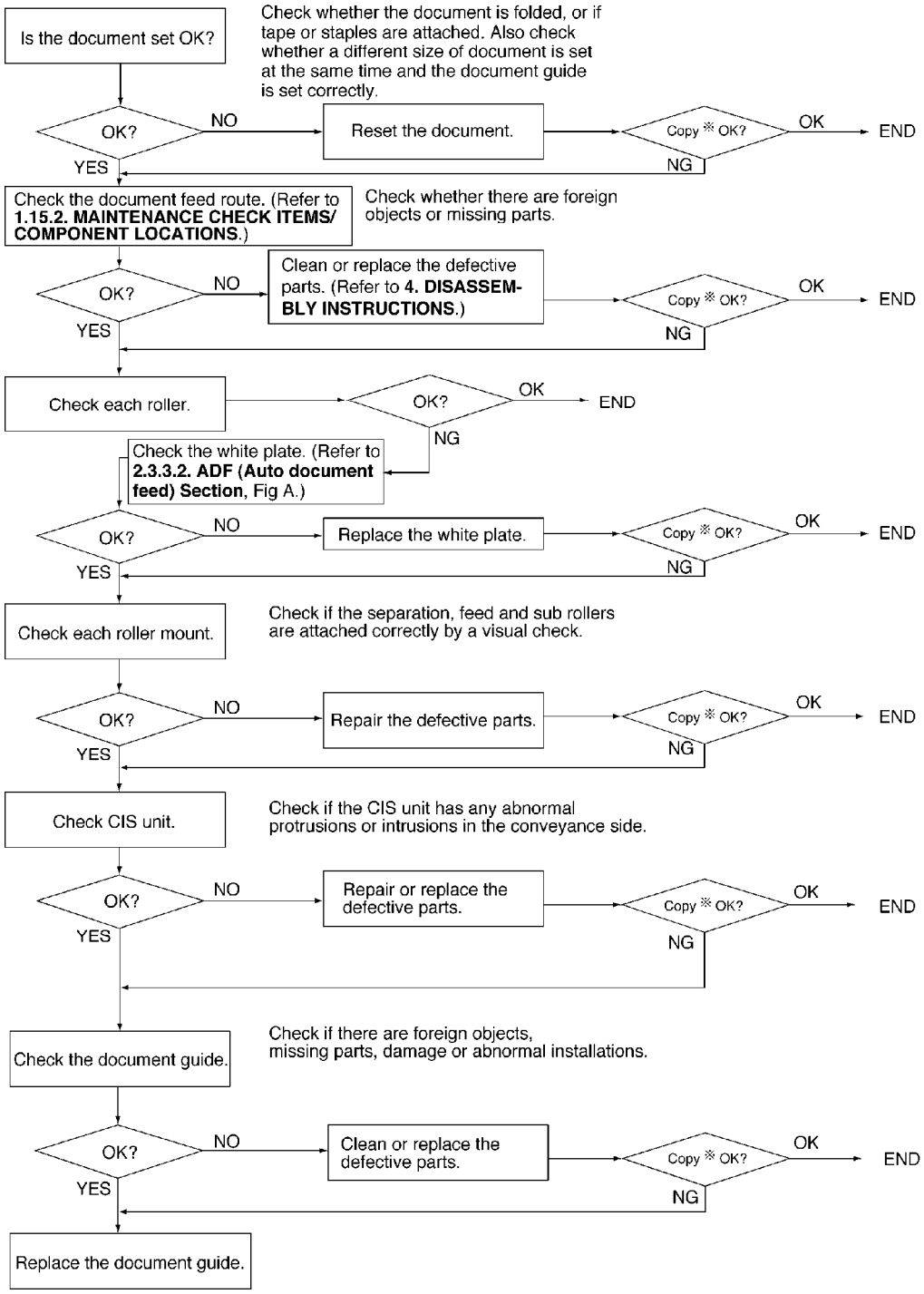

※We recommend making a copy of the Fig. B document in "3. Multiple feed" and using it.

5. The recording paper does not feed.

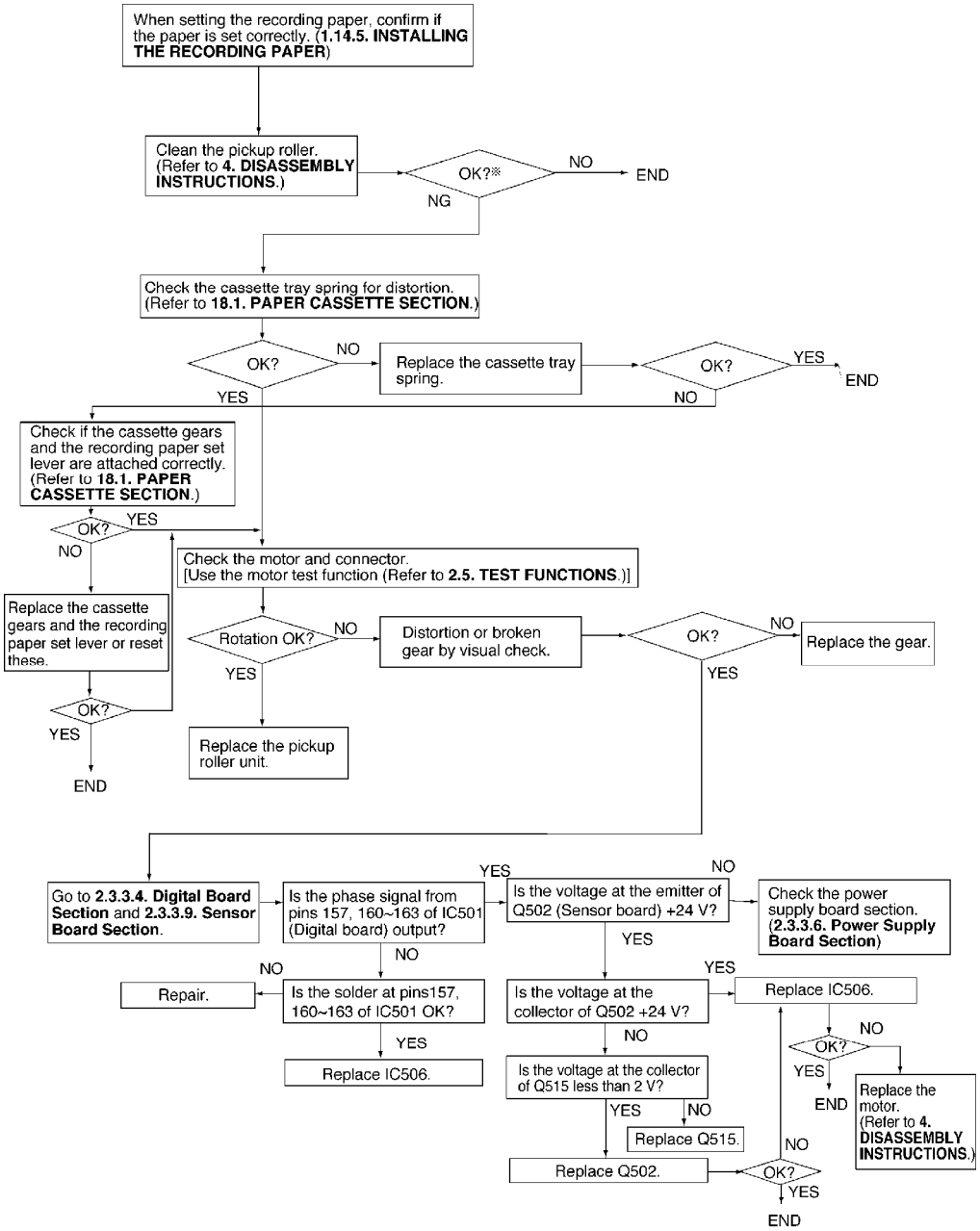

※We recommend making a copy of the Fig. B document in "3. Multiple feed" and using it.

6. Paper JAM

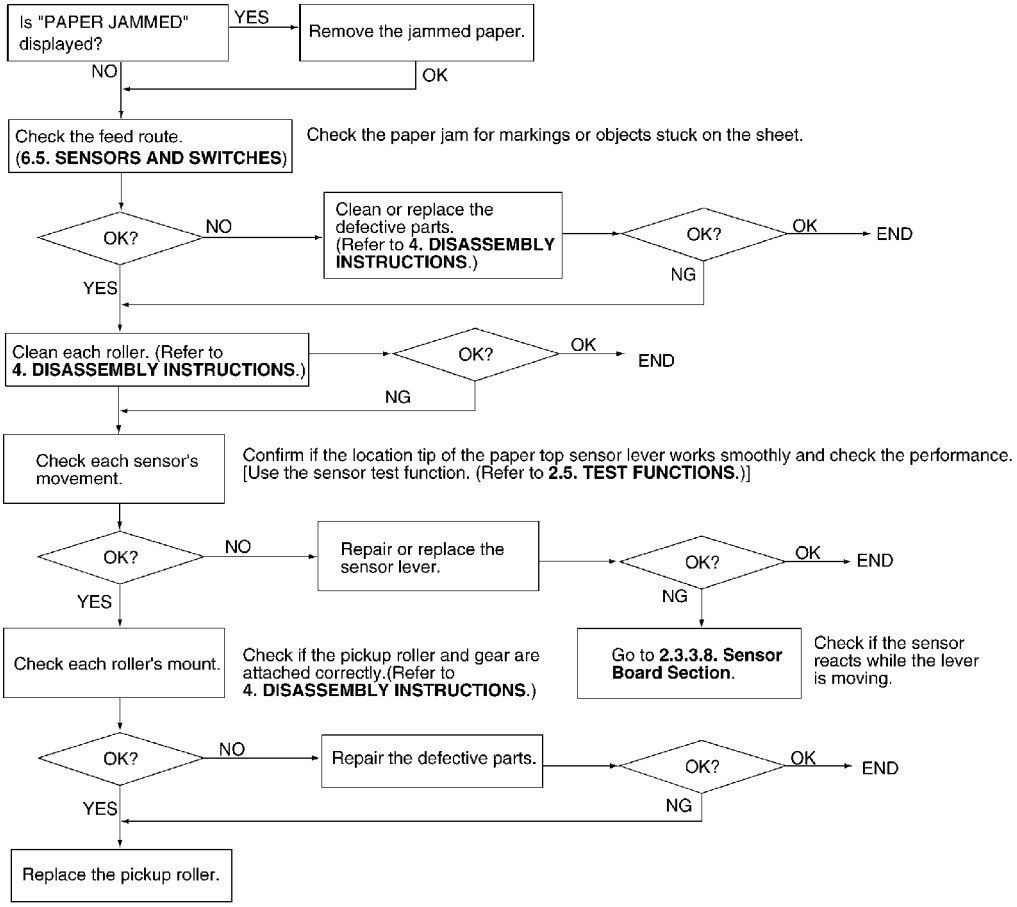

7. Multiple feed and skew

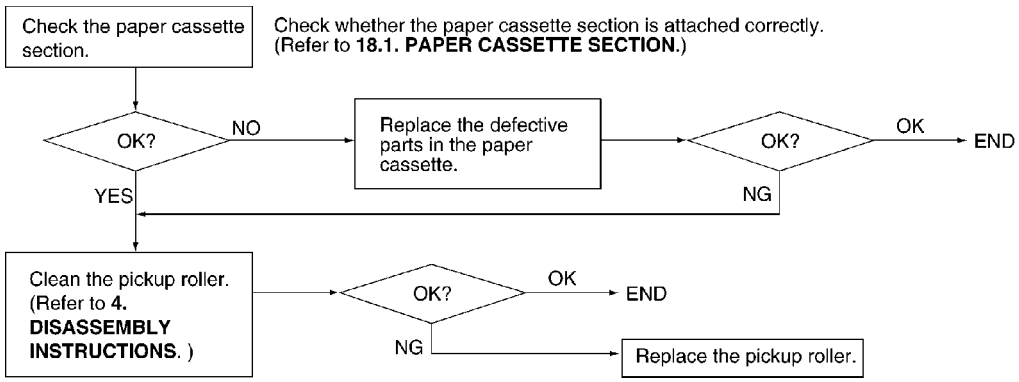

8. The sent fax data is skewed.

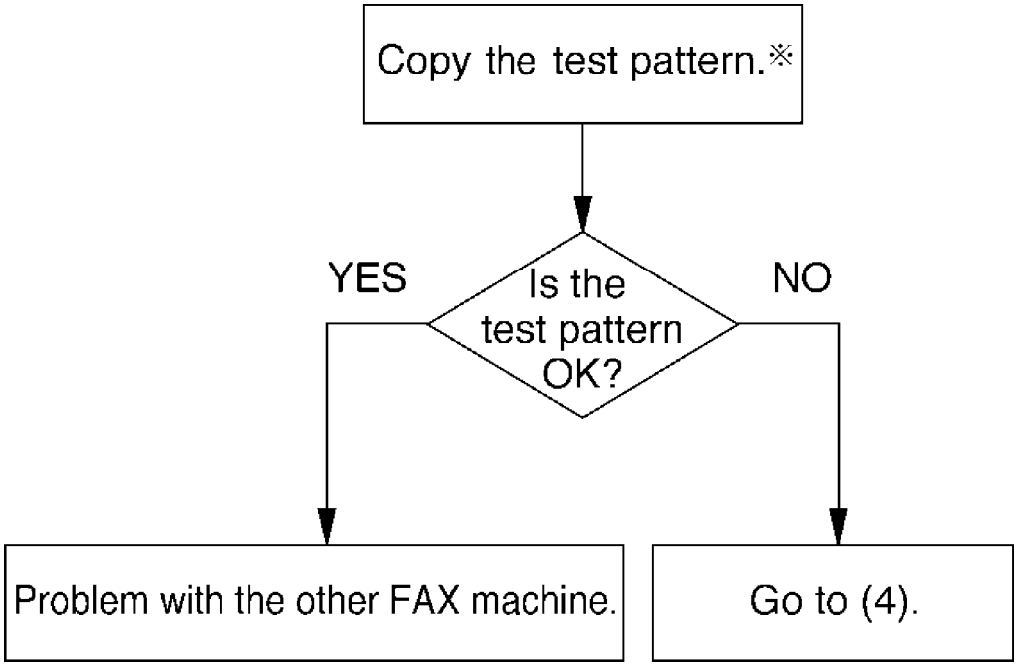

9. The received fax data is skewed.

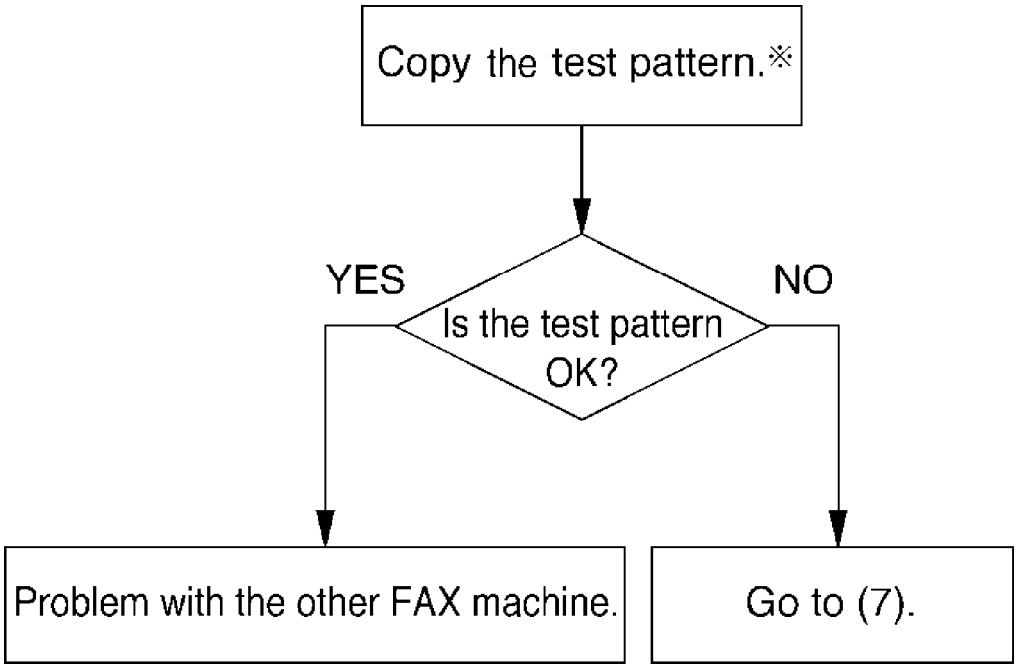

10. Received or copied data is expanded.

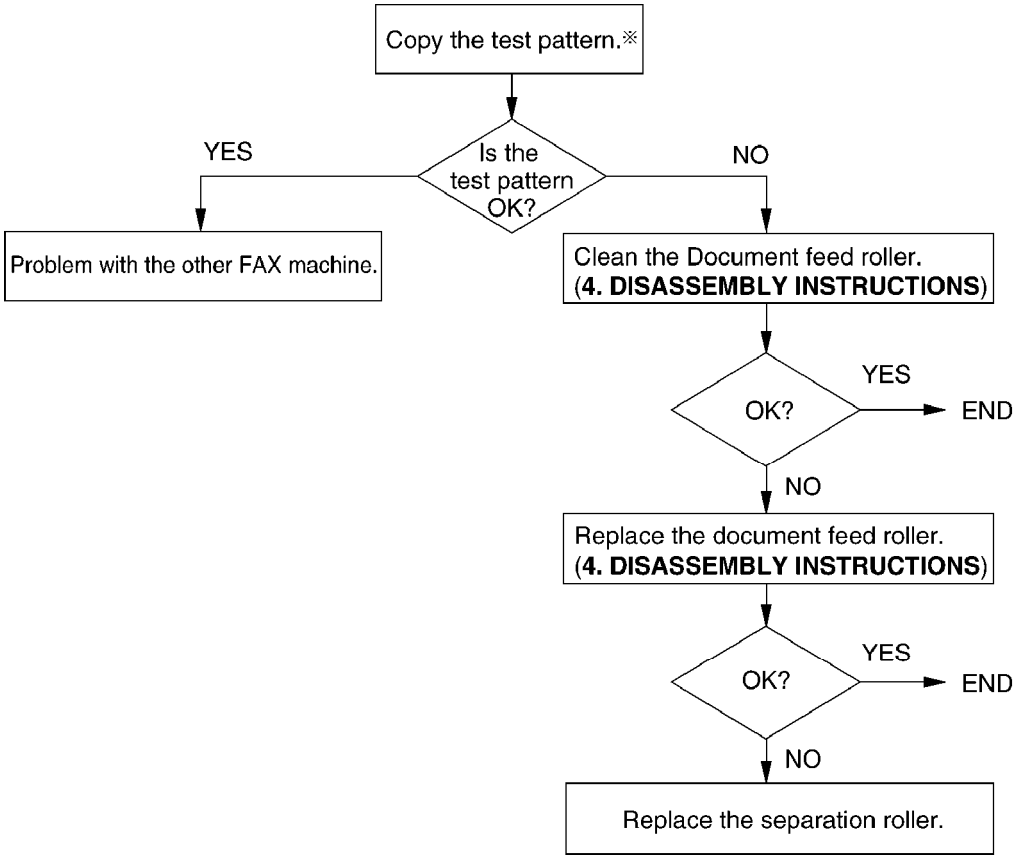

※We recommend making a copy of the Fig. B document in "3. Multiple feed" and using it.

11. A blank page is copied.

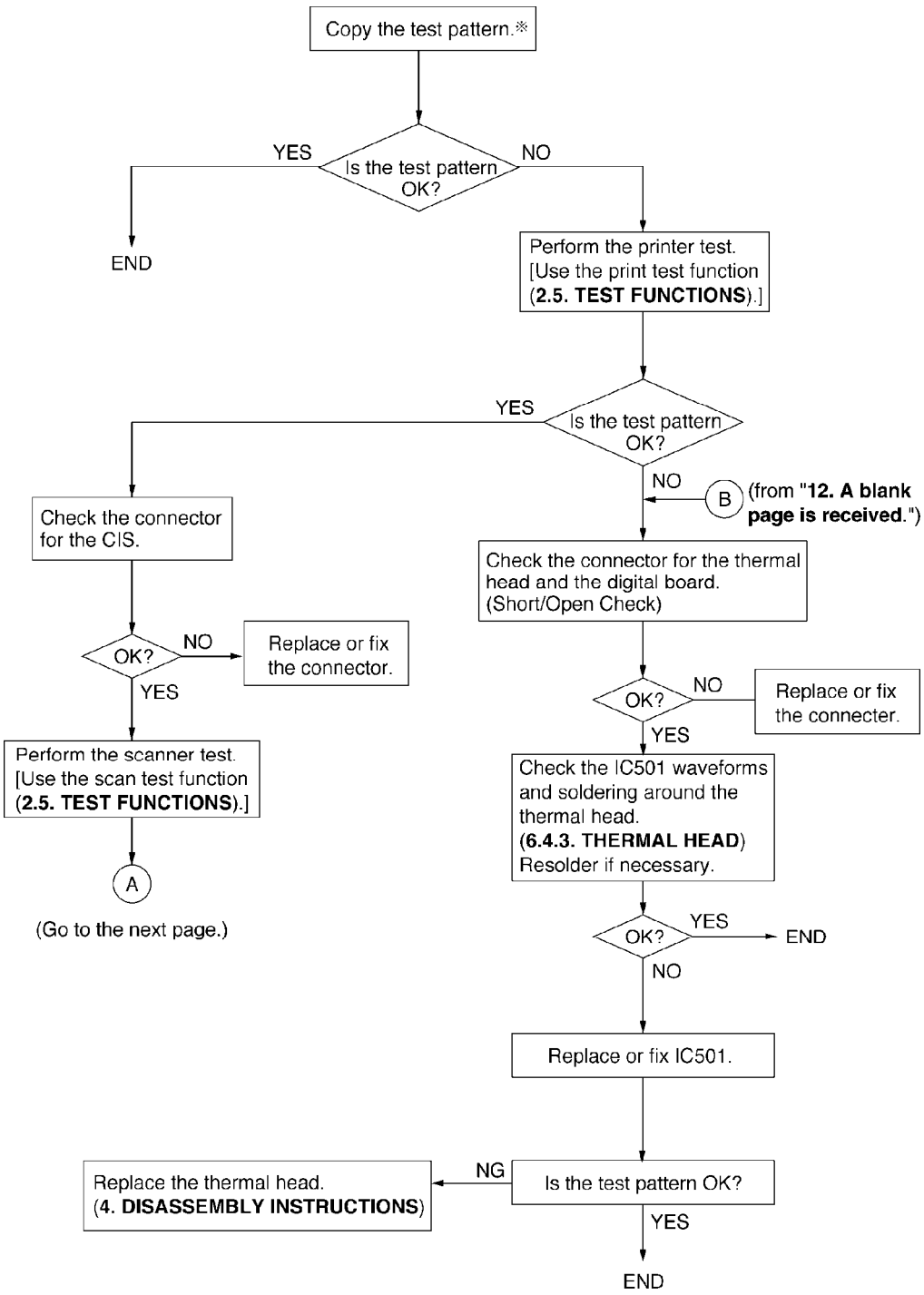

※We recommend making a copy of the Fig. B document in "3. Multiple feed" and using it.

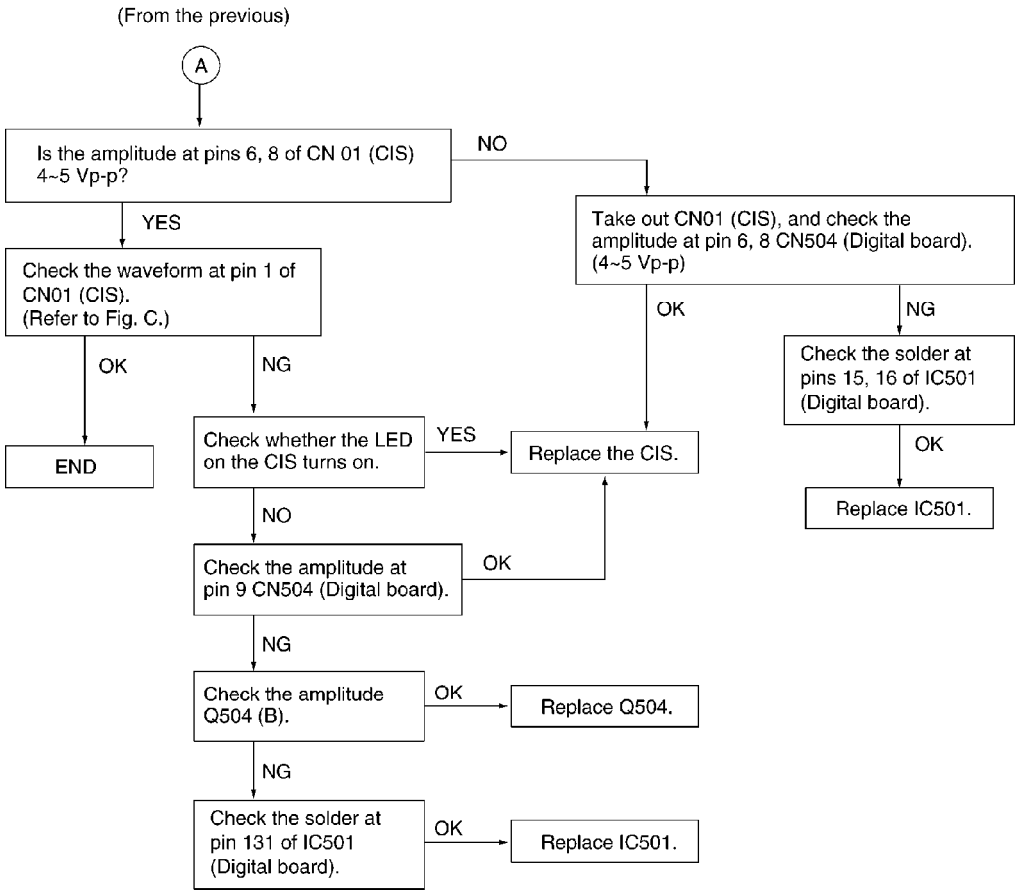

Fig. C

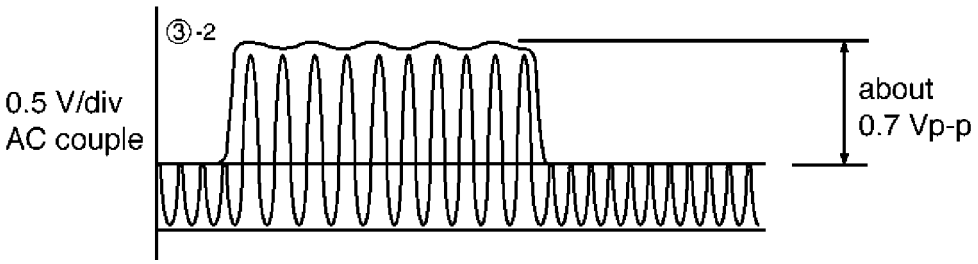

12. A blank page is received.

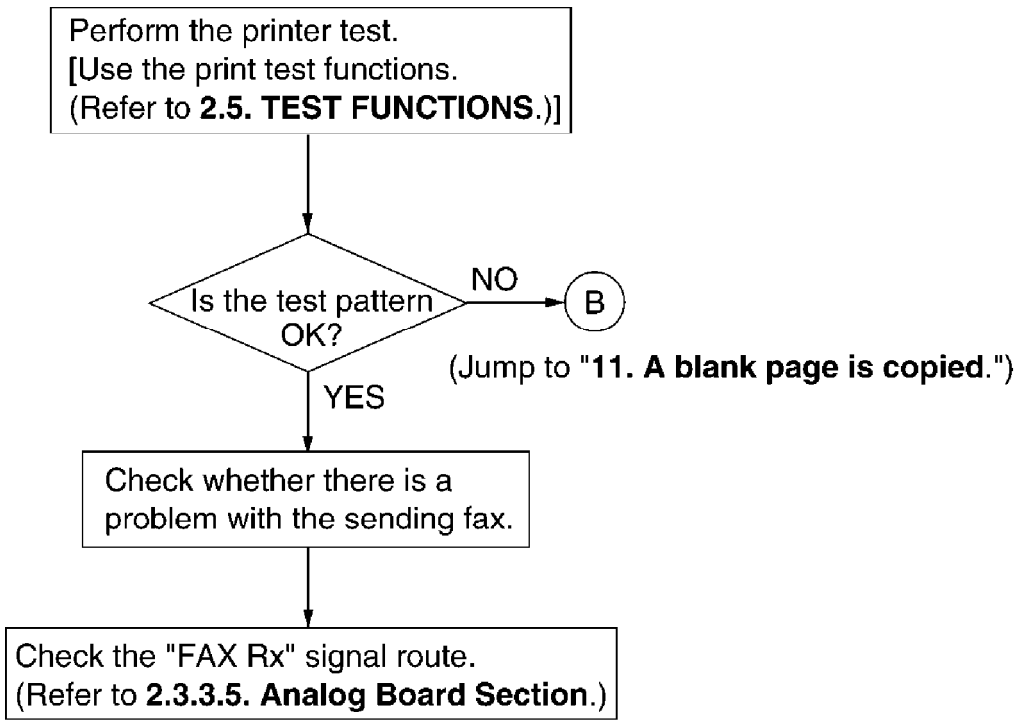

13. Black or white vertical line

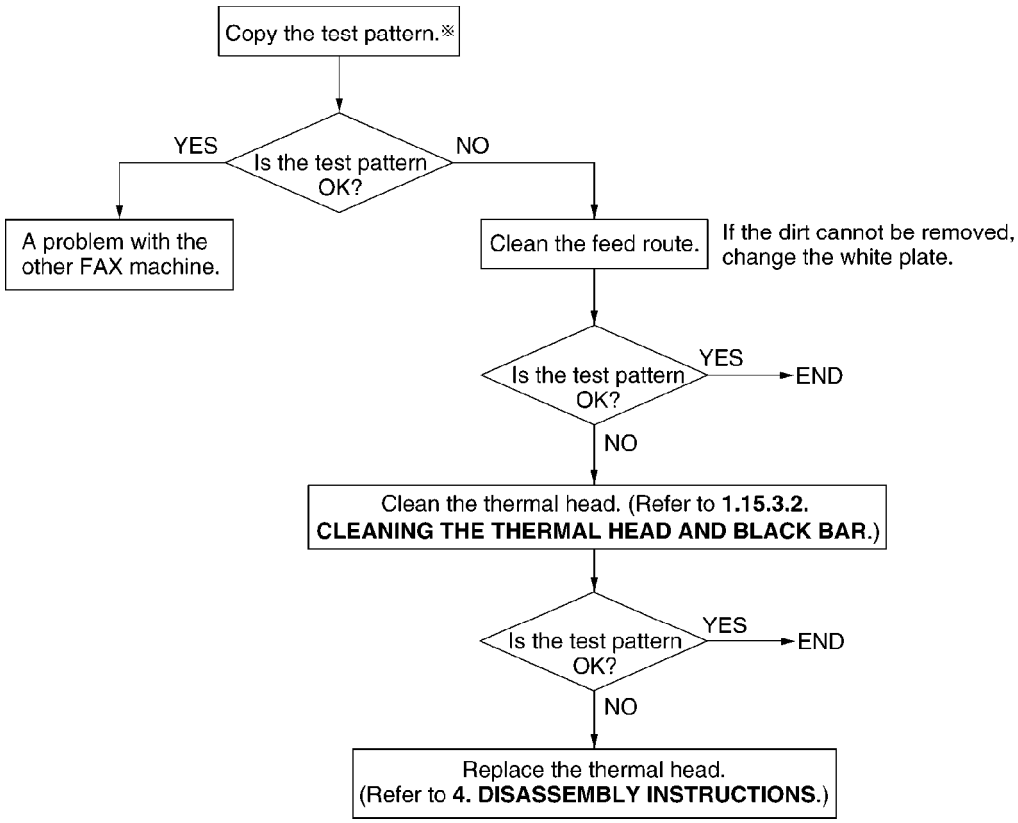

14. Black or white lateral line on print out

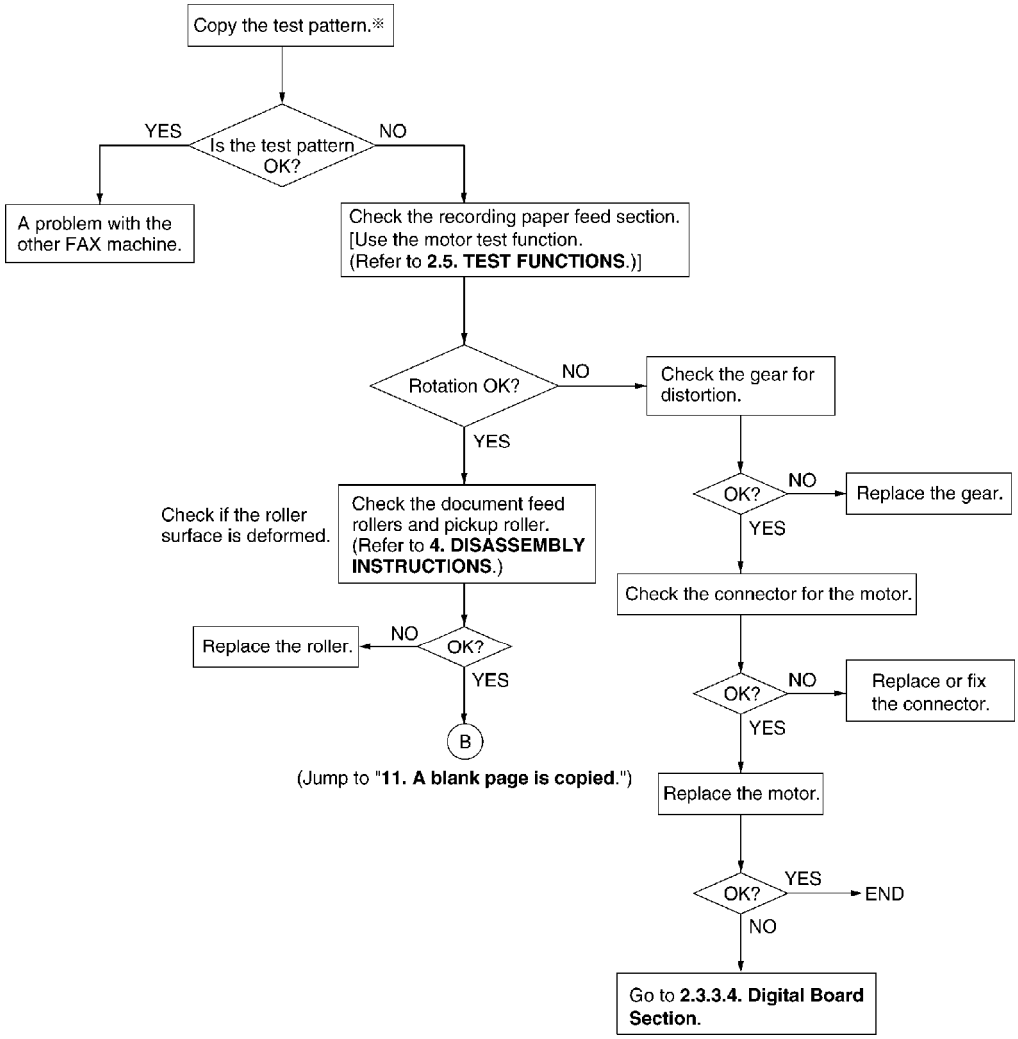

※We recommend making a copy of the Fig. B document in "3. Multiple feed" and using it.

15. An abnormal image is printed.

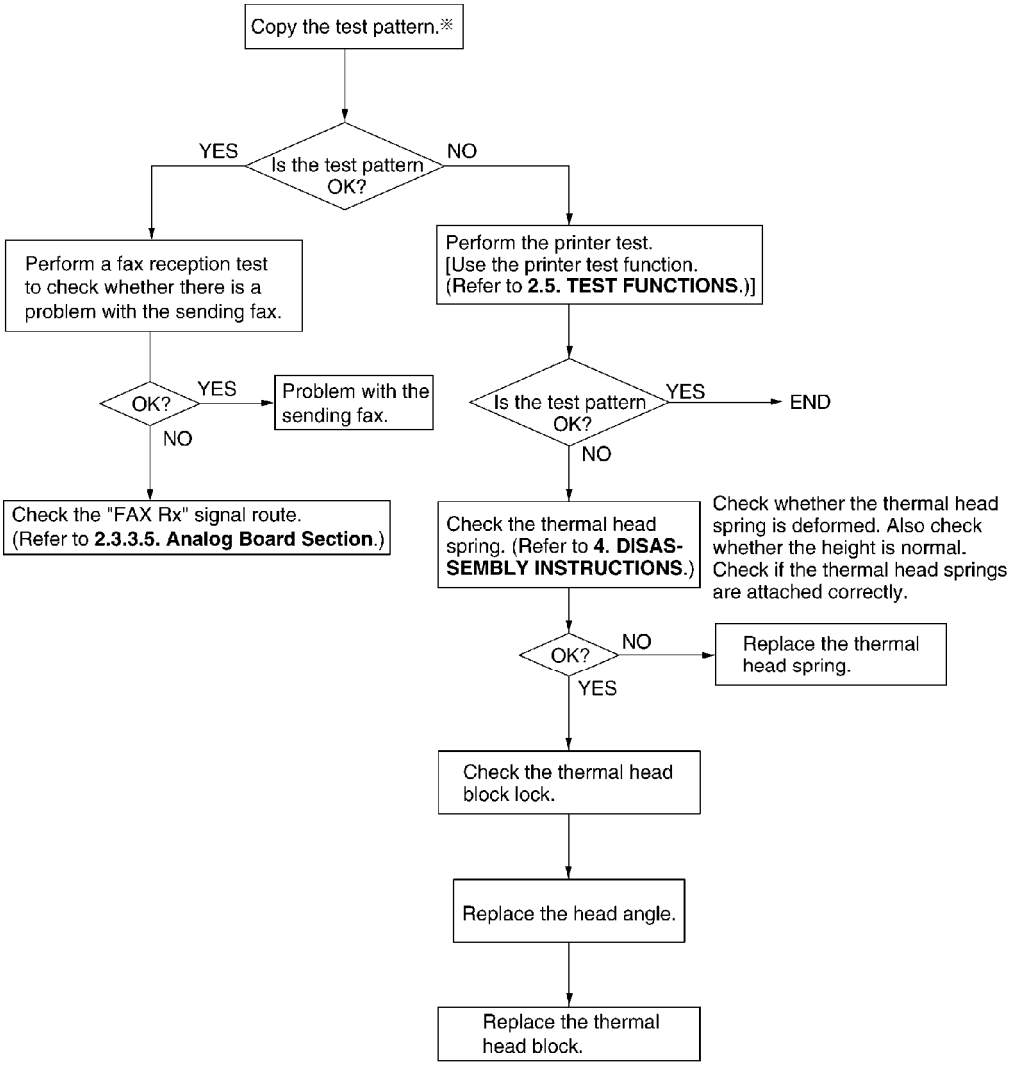

※We recommend making a copy of the Fig. B document in "3. Multiple feed" and using it.

2.3.3.3. Communication Section

Find the problem in the table shown below, and refer to the corresponding troubleshooting procedure in 2.3.3.3.1. Defective facsimile section.

No.	Symptom	Content	Possible cause
1	The paper is not fed properly when faxing. (Nor in the copy mode.)	Troubleshooting	Problem with the feeding mechanism.
2	The fax usually transmits successfully but sometimes fails. (The unit can copy documents.)	Troubleshooting	Problem with the service line or with the receiver's fax.
3	The fax usually receives successfully but sometimes fails. (The unit can copy documents.)	Troubleshooting	Problem with the service line or with the transmitter's fax.
4	The fax completely fails to transmit or receive. (The unit can copy documents.)	Troubleshooting	Problem with the electric circuit.
5	The fax fails either to transmit or receive when making a long distance or an international call. (The unit can copy documents.)	Detailed description of the possible causes (Similar to troubleshooting items No.2 and No.3.)	Problem with the service line.
6	The fax image is poor when transmitting or receiving during a long distance or an international call.		
7	No.1-No.5	The troubleshooting procedure for each error code will be printed on the communication result report.	

2.3.3.3.1. Defective facsimile section

1. Transmit problem

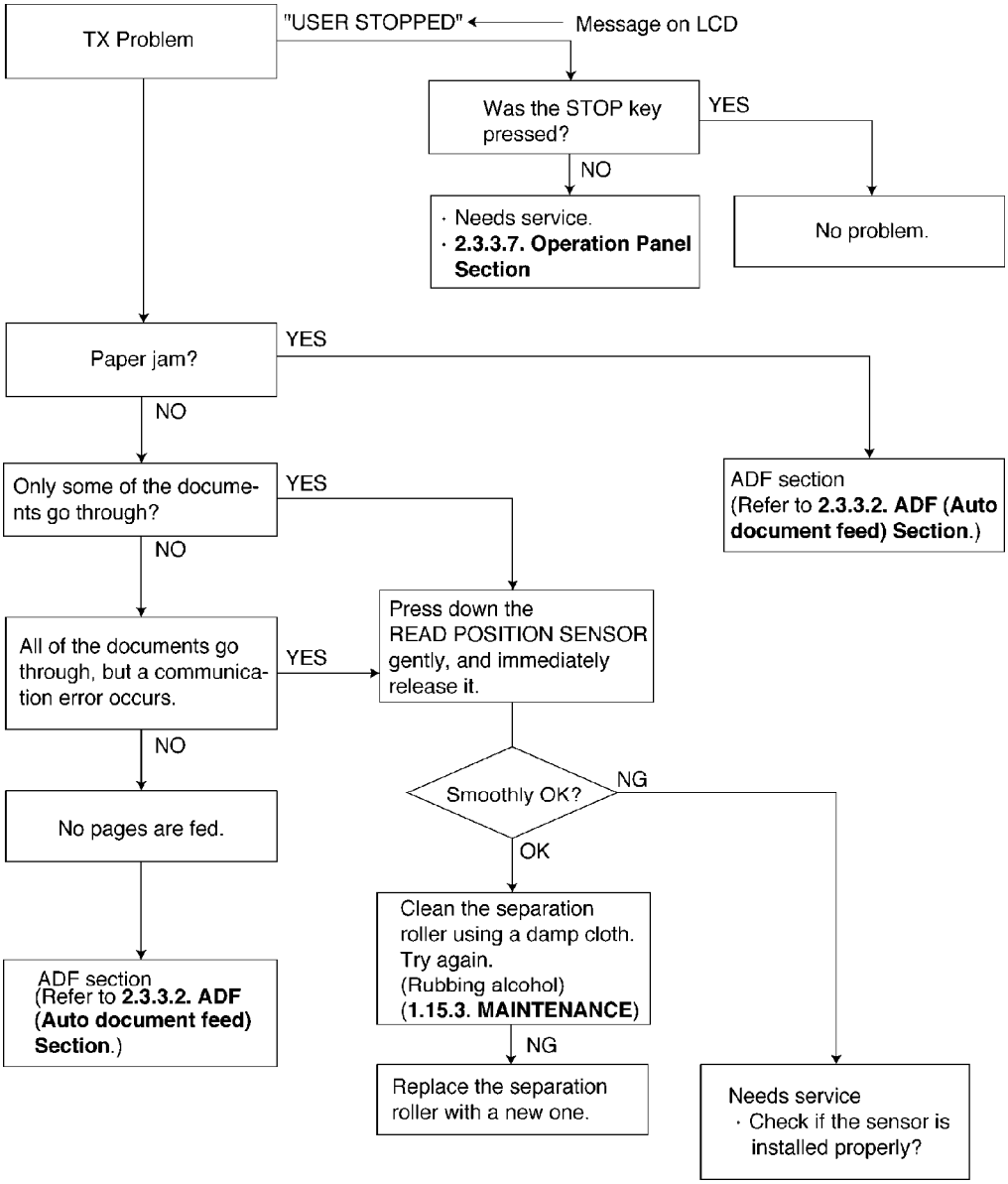

2. Sometimes there is a transmit problem.

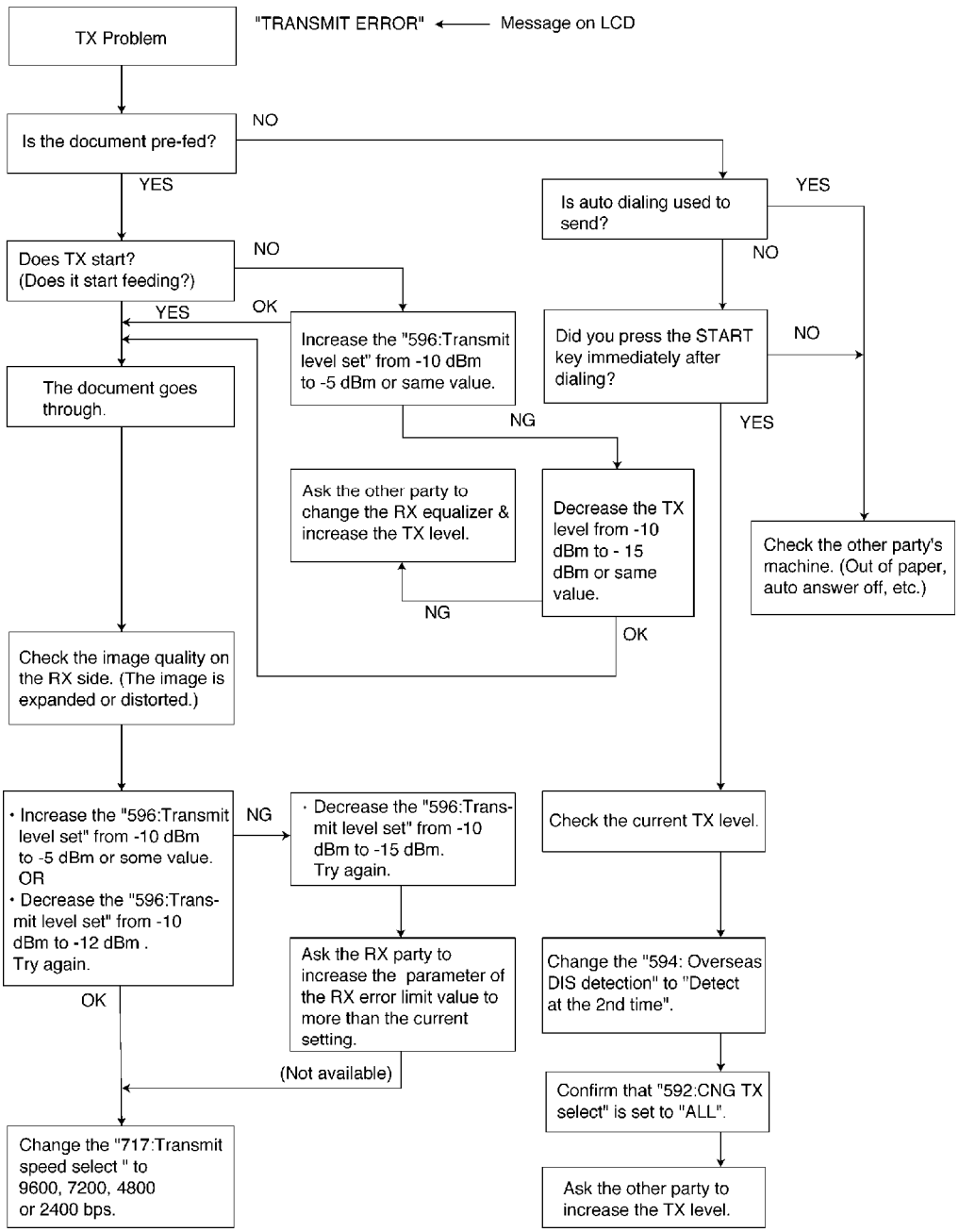

Note:
"596: Transmit level set" represents a service code. (Refer to 2.4.4. Service Function Table.)

3. Receive problem

First confirm whether the recording paper is installed properly or not before starting troubleshooting. (Refer to "Remarks".)

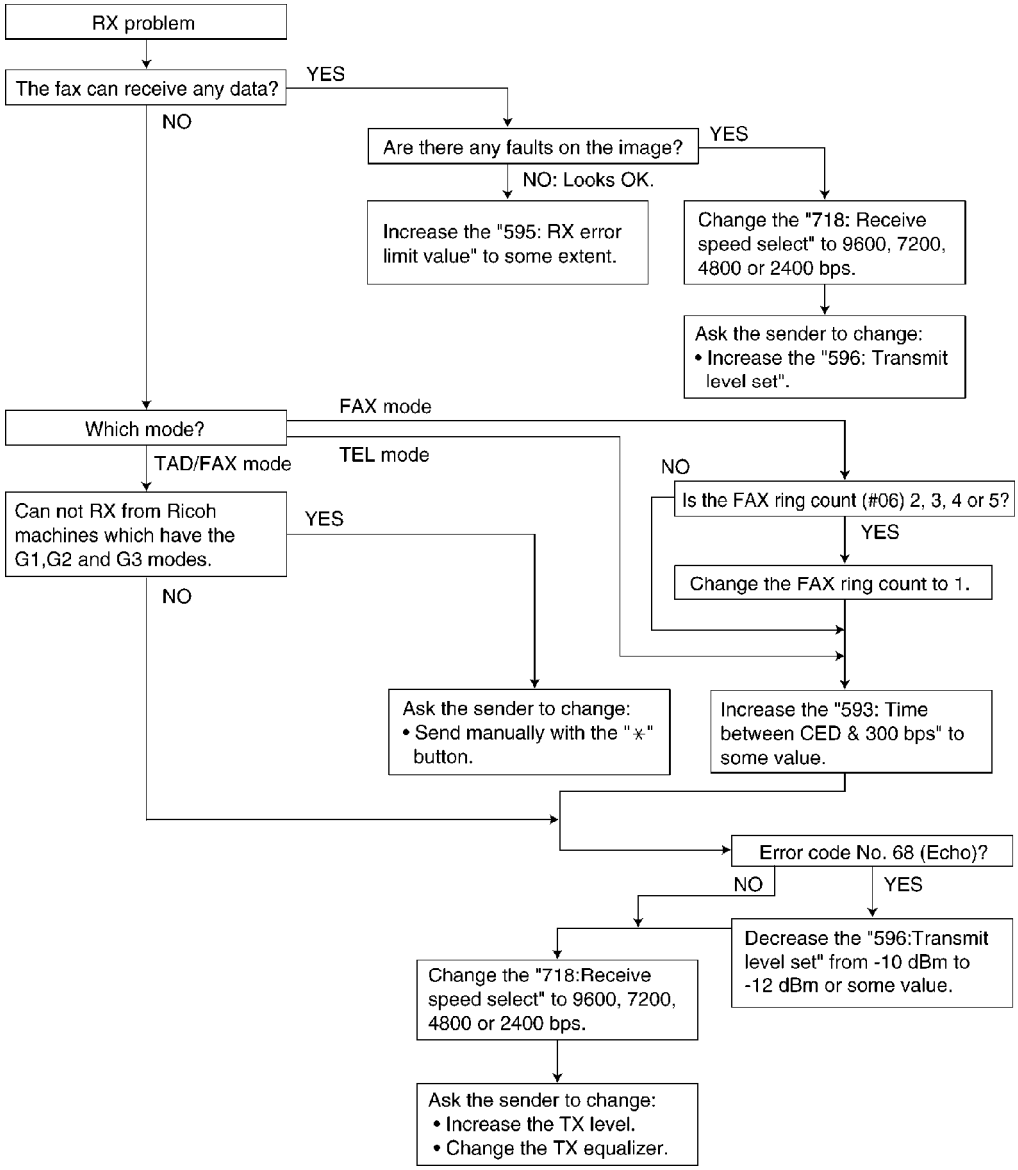

Note:
"596: Transmit level set" represents a service code. (Refer to 2.4.4. Service Function Table.)

Remarks:
Regarding the reception problem, we have investigated the conceivable causes in the flow chart except for the software-related errors. However, some troubles may occur due to the software-related problems such as "OUT OF PAPER" when the fax switches to the memory receiving mode and the memory capacity becomes full of the unprinted data. In this case, error messages [MEMORY FULL] and its main cause, for example "CHECK PAPER" are displayed on the LCD. Once you solve the main problem, [MEMORY FULL] will be cancelled and the reception problem will be resolved.
LCD display messages indicating the error causes are shown below.
CHECK PAPER
CHECK COVER
FILM EMPTY

UNIT OVERHEATED (COVER OPEN, etc.) ...Reset the unit.
PAPER JAMMED
CHECK FILM
Please refer to 2.2. User Recoverable Errors for the above items. If it turns out to be a hardware deformity, please check each sensor. (Refer to 2.5. TEST FUNCTIONS.)

4. The unit can copy, but cannot transmit/receive.

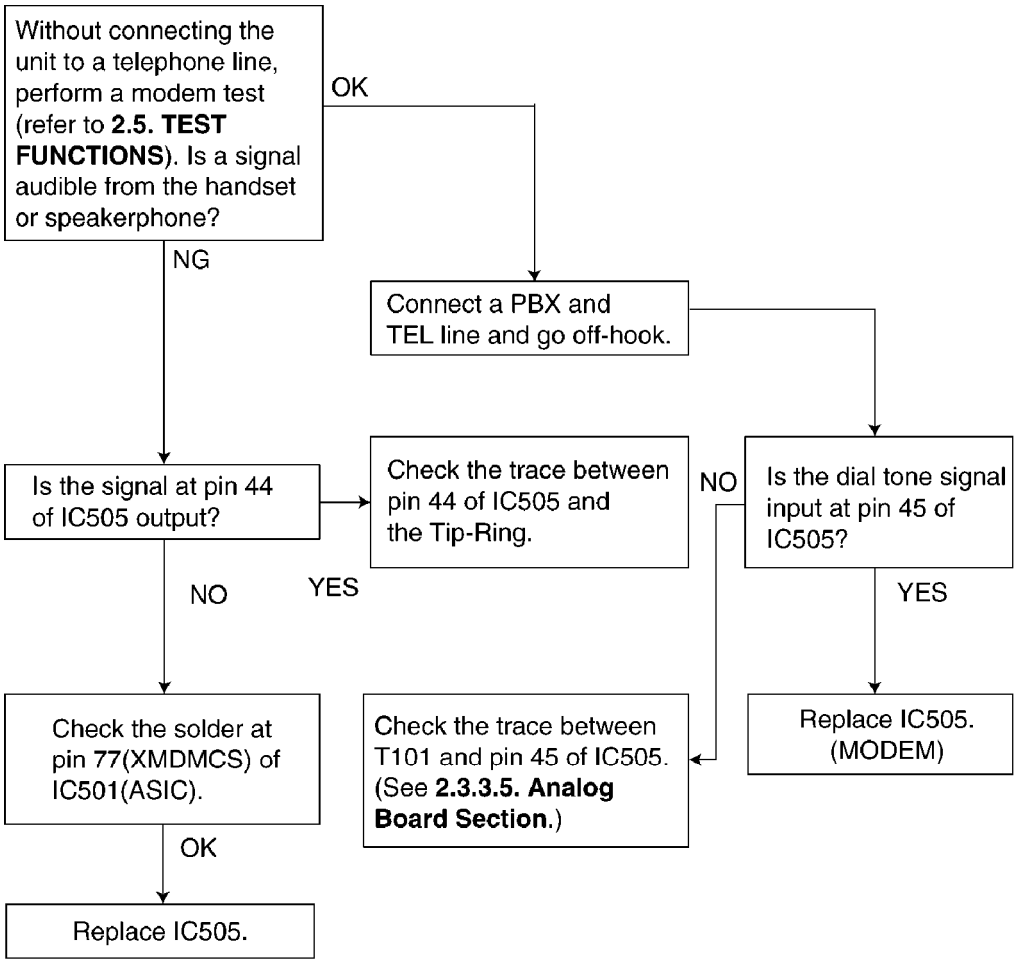

5. The unit can copy, but cannot either transmit/receive long distance or international communications. The following two causes can be considered for this symptom.

Cause 1:
The other party is executing automatic dialing, the call has been received by this unit, and the CED or DIS signal response time is too long. (In most cases, this unit detects the CNG signal and can respond to CED or DIS.) (According to the ITU-T standard, the communication procedure is cancelled when there is no response from the other party within 35 sec, so that the other party releases the line.)

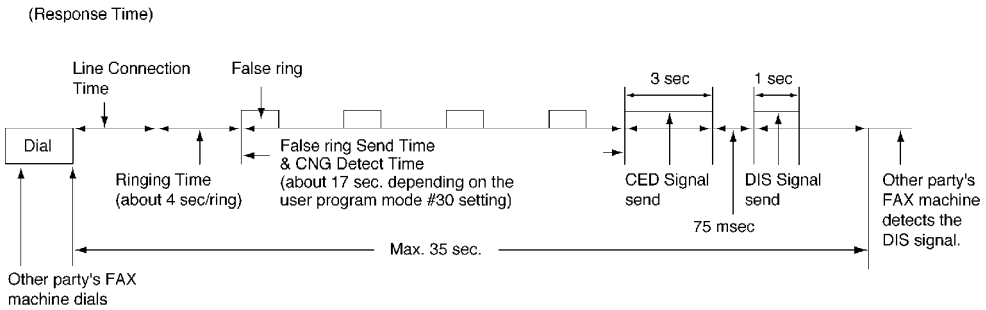

(Cause and Countermeasure)

As shown in the chart above, the total handshaking time must be reduced, but because of the long distance connection and linking of several stations, the line connection time cannot be reduced. Accordingly, the following countermeasures should be tried.

(A)... As the 35 sec. count is started directly after dialing or directly after the START button has been pressed for models with a START button, the other party should be called manually, if possible. Another possibility is entering two pauses at the end of the auto dial number on the transmission side. Then the count start time can be delayed for 2 pauses (about 10 sec.).

Cause 2:

Erroneous detection because of an echo or an echo canceler.

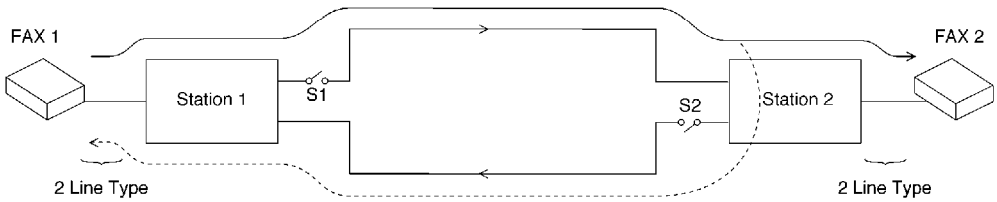

The sea bottom cable or satellite communication path (4 Line Type)

(Echo/Echo Canceler)

The signal from FAX1 reaches FAX2 via stations 1 and 2, but the reflection signal at station 2 also returns via station 1 (echo). As the distance between station 1 and station 2 is far, the echo returns to FAX 1 at a max of 600 msec after transmission. There is a possibility that this signal is detected erroneously as the signal from FAX2. For a normal call, there is also a possibility that the echo of their own voice will make the call difficult to understand. For this reason, each station (station 1 and station 2) attaches echo cancelers (S1 and S2) for international lines or long distance

lines. For the echo canceler, the level of the transmission signal from FAX 1 is compared with the level of the reception signal from FAX2. When the transmission signal is larger, S1 is closed while S2 is opened when it is smaller. In other words, for transmission from FAX1, S1 is closed and S2 is open, so that the echo does not return to FAX1.

(Causes and Countermeasures)

(Cause A)

When a training signal is transmitted from FAX1 during the communication procedure at the time of transmission from FAX1 to FAX2, there is a delay until the echo canceler operates. S1 is closed so that a part of the head of the training signal may drop out. Normal reception by FAX2 may not be possible, and transmission may not be started.

(Countermeasure A)

When the international line mode is ON in the service mode (code No. 521), a dummy signal is attached to the head of the training signal to prevent this problem. As this is normally ON, it is necessary to reconfirm that this has not become OFF. When the international mode is switched OFF, the transmission side will try the training signal three times at each speed (9600BPS, 4800BPS and 2400BPS). If NG, it will drop the speed by one rank (fall-back). When the international mode is switched ON, each speed will be tried only twice. In other words, the slower speed with fewer errors can be accessed more easily. This is done because the line conditions may deteriorate and the picture may be disturbed more easily during communication for international lines or long distance communication, even when the training is OK. The default value is ON as preference is given to clearer pictures rather than speed.

(Cause B)

The echo canceler operation stops with a 2100Hz signal. (i.e. S1 and S2 become ON). Accordingly, when FAX1 has executed automatic reception, a CED signal is output. If this signal is 2100Hz, S1 and S2 will become ON. Then the echo of the DIS signal output afterwards may be received and FAX1 may execute

an erroneous operation, preventing communication from starting.
(Countermeasure B)
In the service mode, the CED signal frequency is set to 1100 Hz (code No.520), or the time setting between the CED signal and the DIS signal is set from 75 msec to 500 msec in the service mode (code No.593). This is because the echo canceler operation stop mode is canceled by an interval of 250 msec or more. / Reduce receiving sensitivity to reduce the effect of RCV echo signal. (Service mode: code No. 598)
(Cause C)
This model is FAX1 and the other party is FAX2.
For transmission from this model to FAX2, FAX2 executes automatic reception and transmits a CED signal (2100 Hz) followed by a DIS signal. As the echo cancelers stops as described in cause B, the echo of the DIS signal returns to FAX2. On the other hand, this model detects the DIS signal and transmits a DCS signal. In other words, it is possible that the echo of the DIS signal and the DCS signal transmitted from this model reach FAX2 one after the other. FAX2 detects an error and communication does not start.
(Countermeasure C)
When the international DIS detection setting is set in the service mode (code No.594), this model does not respond to the first DIS signal and returns a DCS signal only for the second DIS signal. In other words, there is an interval of 250 msec between transmission of the first and second DIS signal so that the echo cancelers operation recovers. An echo is not generated for the second DIS signal.

Note:
When the other FAX does not respond with a DCS signal after DIS signal transmission, the DIS signal is transmitted three times for trial.

Summary:
Symptom/Countermeasure Table (Long distance and international communication operations)

SYMPTOM	COUNTERMEASURE
Does not receive in the automatic mode.	1. If possible, manual transmission should be done from the transmission side. 2. If possible, two pauses should be inserted at the end of the auto dial number on the transmission side. 3. If possible, the Function Selector Switch should be switched to FAX.
Does not transmit.	1. Confirm the international line mode is ON. (Service mode: code No. 521) 2. Set the international DIS detection. (Service mode: code No. 594)
Does not receive.	1. Set the time setting between the CED signal and the DIS signal to 500 msec. (Service mode: code No. 593) 2. Set the CED frequency to 1100Hz. (Service mode: code No. 520)

6. The unit can copy, but the transmission and reception image are incorrect.
(Long distance or international communication operation)
This symptom highly depends on the transmission and reception capability of the other FAX unit and the line conditions.
The countermeasures for this unit are shown below.

Transmission Operation:
Set the transmitting speed to 4800BPS (service mode: code No. 717) or select the overseas mode.

Reception Operation:
If 80% or more of the reception is incorrect, set the receiving speed to 4800BPS. (Service mode: code No. 718)

- Refer to 2.4.4. SERVICE FUNCTION TABLE.

7. How to output the Journal Report:
A. Press the MENU button.
B. Press "#", then " 8 " and " 4 ".
C. Press the START/COPY/SET button.
D. The report prints out.

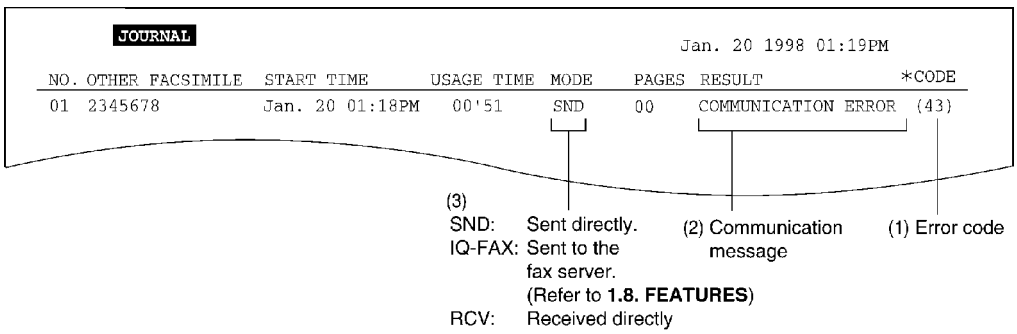

Error code table:

(1) CODE	(2) RESULT	(3) MODE	SYMPTOM	Cou mea
	PRESSED THE STOP KEY	TX & RX	Communication was interrupted by the STOP button.	
	DOCUMENT JAMMED	TX	The document paper is jammed.	
	NO DOCUMENT	TX	No document paper.	
	THE COVER WAS OPENED	TX & RX	The cover is open.	
40	NO RESPONSE	TX	Transmission is finished when the T1 TIMER expires.	
41	COMMUNICATION ERROR	TX	DCN is received after DCS transmission.	
42	COMMUNICATION ERROR	TX	FTT is received after transmission of a 2400BSP training signal.	
43	COMMUNICATION ERROR	TX	No response after post message is transmitted three times.	
44	COMMUNICATION ERROR	TX	RTN and PIN are received.	
46	COMMUNICATION ERROR	RX	No response after FTT is transmitted.	
48	COMMUNICATION ERROR	RX	No post message.	
49	COMMUNICATION ERROR	RX	RTN is transmitted.	
50	COMMUNICATION ERROR	RX	PIN is transmitted (to PRI-Q).	
51	COMMUNICATION ERROR	RX	PIN is transmitted.	
52	NO RESPONSE	RX	Reception is finished when the T1 TIMER expires.	
54	ERROR-NOT YOUR UNIT	RX	DCN is received after DIS transmission.	
58	COMMUNICATION ERROR	RX	DCN is received after FTT transmission.	
59	ERROR-NOT YOUR UNIT	TX	DCN responds to the post message.	
65	COMMUNICATION ERROR	TX	DCN is received before DIS reception.	
65	COMMUNICATION ERROR	RX	Reception is not EOP, EOM PIP, PIN, RTP or RTN.	
68	COMMUNICATION ERROR	RX	No response at the other party after MCF or CFR is transmitted.	
70	ERROR-NOT YOUR UNIT	RX	DCN is received after CFR transmission.	
72	COMMUNICATION ERROR	RX	Carrier is cut when the image signal is received.	
75	MEMORY FULL	RX	The document was not received due to memory full.	

(1) CODE	(2) RESULT	(3) MODE	SYMPTOM	Cou mea
79	CANCELED	TX	The multistation transmission was rejected by the user.	
FF	COMMUNICATION ERROR	TX & RX	Modem error. For the DCN, DCN, etc. abbreviations, refer to 6.6. MODEM SECTION.	

TX=TRANSMISSION RX=RECEPTION

Most fax communication problems can be resolved by the following steps.

A. Change the transmit level. (Service code: 596, refer to 2.4.4. SERVICE FUNCTION TABLE.)

B. Change the TX speed/RX speed. (Service code: 717/718, refer to 2.4.4. SERVICE FUNCTION TABLE.)

Note*:
If the problem remains, see the following "Countermeasure" flow chart.

Countermeasure

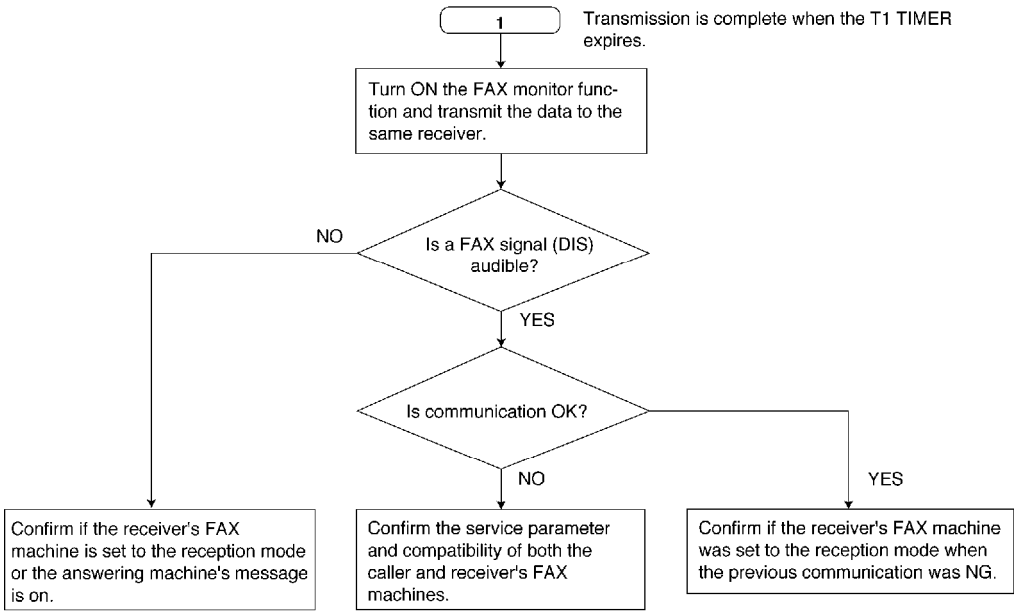

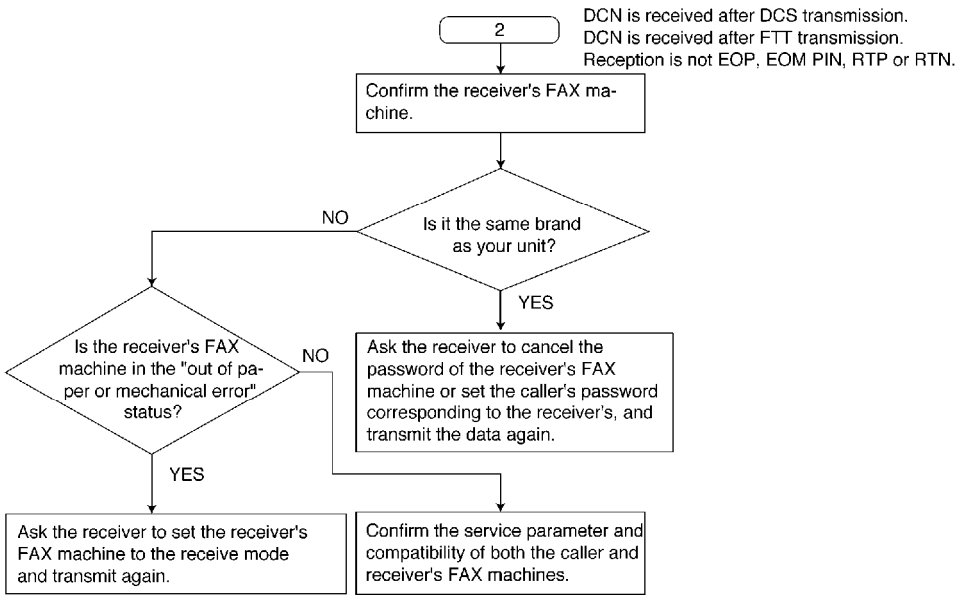

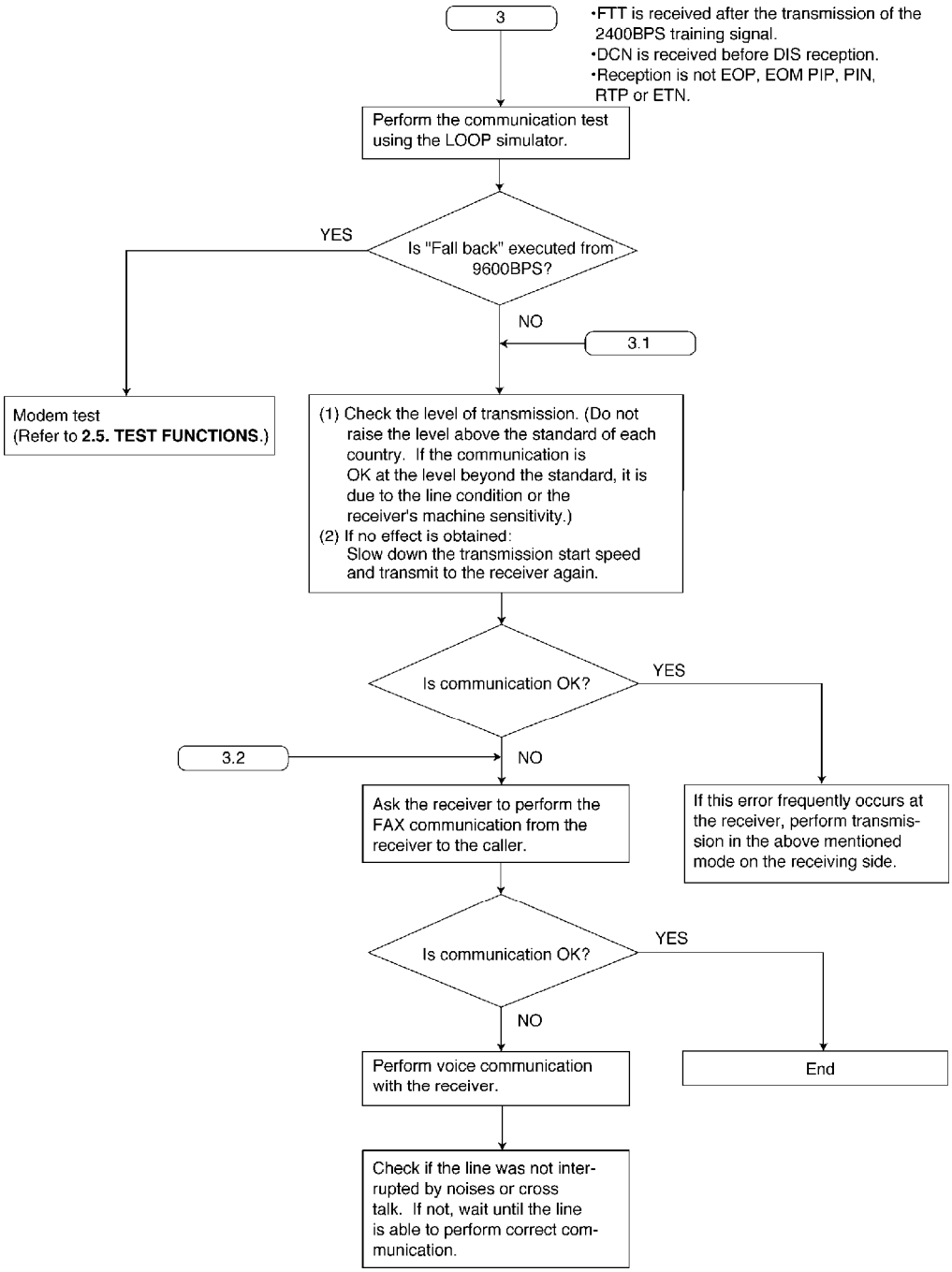
3
•FTT is received after the transmission of the 2400BPS training signal.
•DCN is received before DIS reception.
•Reception is not EOP, EOM PIP, PIN, RTP or ETN.
Perform the communication test using the LOOP simulator.
Is "Fall back" executed from 9600BPS?
YES
NO
3.1
Modem test
(Refer to 2.5. TEST FUNCTIONS.)
(1) Check the level of transmission. (Do not raise the level above the standard of each country. If the communication is OK at the level beyond the standard, it is due to the line condition or the receiver's machine sensitivity.)
(2) If no effect is obtained:
Slow down the transmission start speed and transmit to the receiver again.
Is communication OK?
YES
3.2
NO
Ask the receiver to perform the FAX communication from the receiver to the caller.
If this error frequently occurs at the receiver, perform transmission in the above mentioned mode on the receiving side.
Is communication OK?
YES
NO
Perform voice communication with the receiver.
End
Check if the line was not interrupted by noises or cross talk. If not, wait until the line is able to perform correct communication.

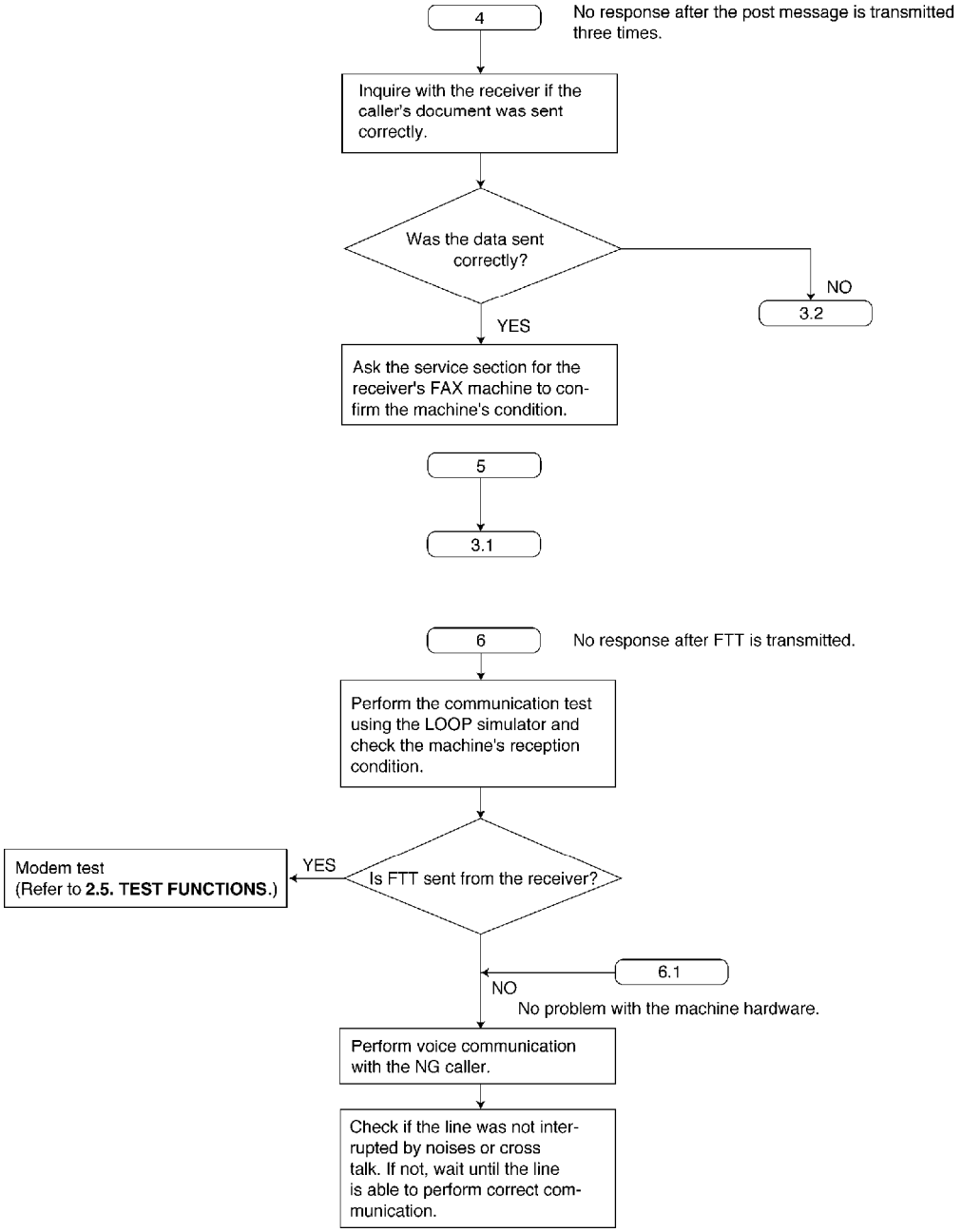
4
No response after the post message is transmitted three times.
Inquire with the receiver if the caller's document was sent correctly.
Was the data sent correctly?
NO
3.2
YES
Ask the service section for the receiver's FAX machine to confirm the machine's condition.
5
3.1
6
No response after FTT is transmitted.
Perform the communication test using the LOOP simulator and check the machine's reception condition.
Modem test
(Refer to 2.5. TEST FUNCTIONS.)
YES
Is FTT sent from the receiver?
6.1
NO
No problem with the machine hardware.
Perform voice communication with the NG caller.
Check if the line was not interrupted by noises or cross talk. If not, wait until the line is able to perform correct communication.

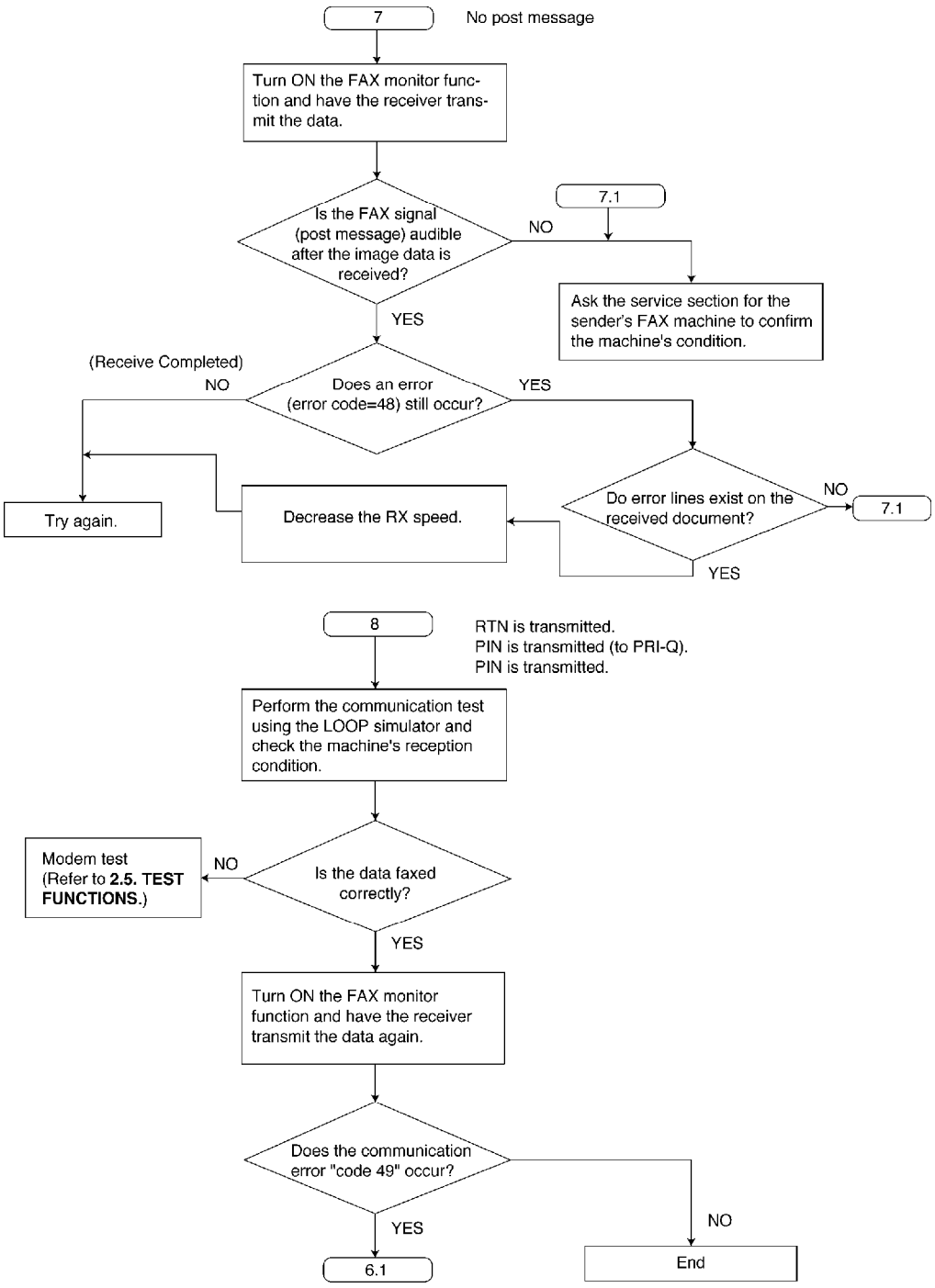
7
No post message
Turn ON the FAX monitor function and have the receiver transmit the data.
Is the FAX signal (post message) audible after the image data is received?
NO
7.1
Ask the service section for the sender's FAX machine to confirm the machine's condition.
YES
(Receive Completed)
NO
Does an error (error code=48) still occur?
YES
Try again.
Decrease the RX speed.
Do error lines exist on the received document?
NO
7.1
YES
8
RTN is transmitted.
PIN is transmitted (to PRI-Q).
PIN is transmitted.
Perform the communication test using the LOOP simulator and check the machine's reception condition.
Modem test (Refer to **2.5. TEST FUNCTIONS.**)
NO
Is the data faxed correctly?
YES
Turn ON the FAX monitor function and have the receiver transmit the data again.
Does the communication error "code 49" occur?
YES
6.1
NO
End

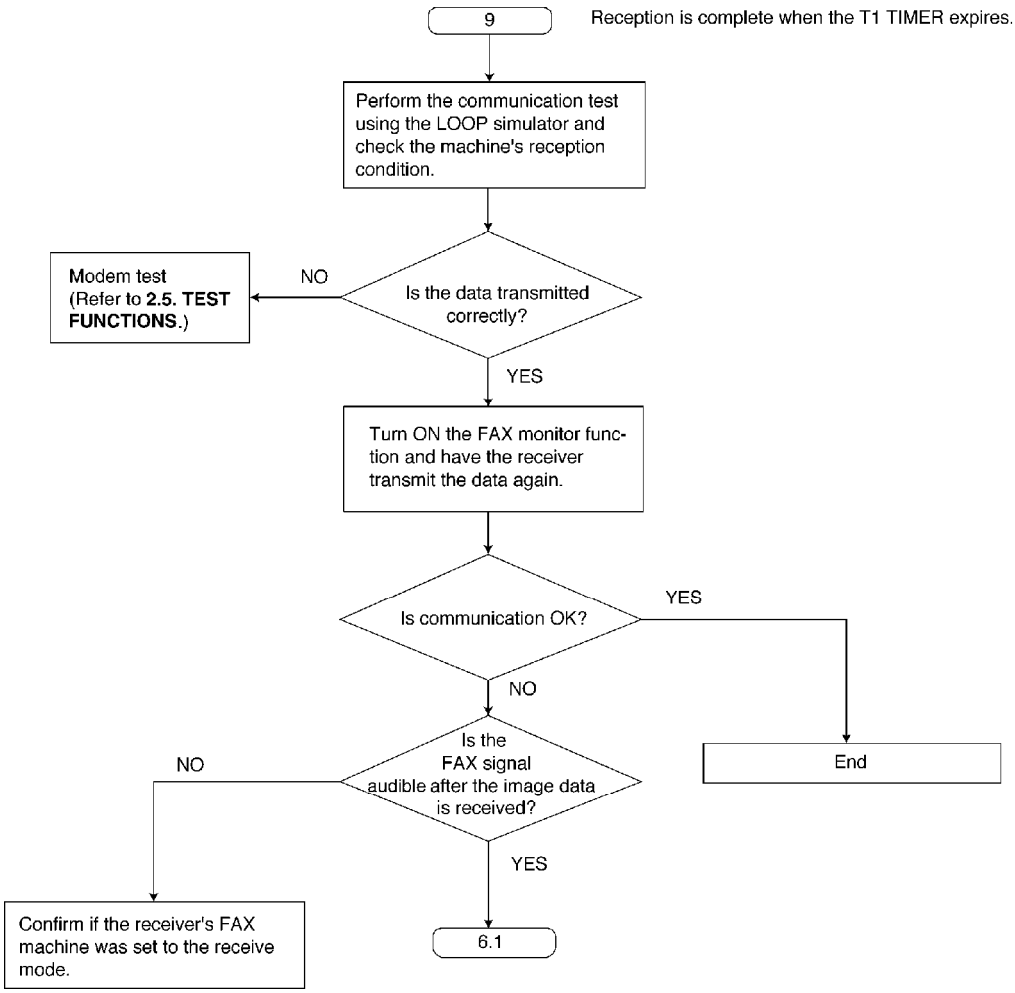
9
Reception is complete when the T1 TIMER expires.
Perform the communication test using the LOOP simulator and check the machine's reception condition.
Is the data transmitted correctly?
NO
Modem test (Refer to 2.5. TEST FUNCTIONS.)
YES
Turn ON the FAX monitor function and have the receiver transmit the data again.
Is communication OK?
YES
End
NO
Is the FAX signal audible after the image data is received?
NO
YES
Confirm if the receiver's FAX machine was set to the receive mode.
6.1

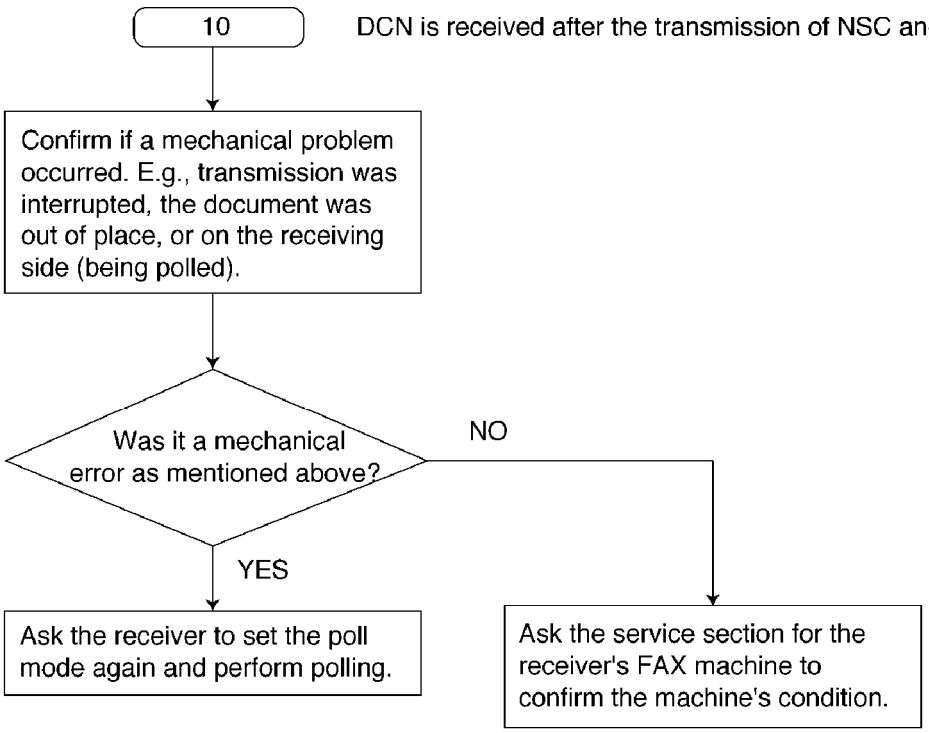
10
DCN is received after the transmission of NSC and DTC.
Confirm if a mechanical problem occurred. E.g., transmission was interrupted, the document was out of place, or on the receiving side (being polled).
Was it a mechanical error as mentioned above?
NO
YES
Ask the receiver to set the poll mode again and perform polling.
Ask the service section for the receiver's FAX machine to confirm the machine's condition.

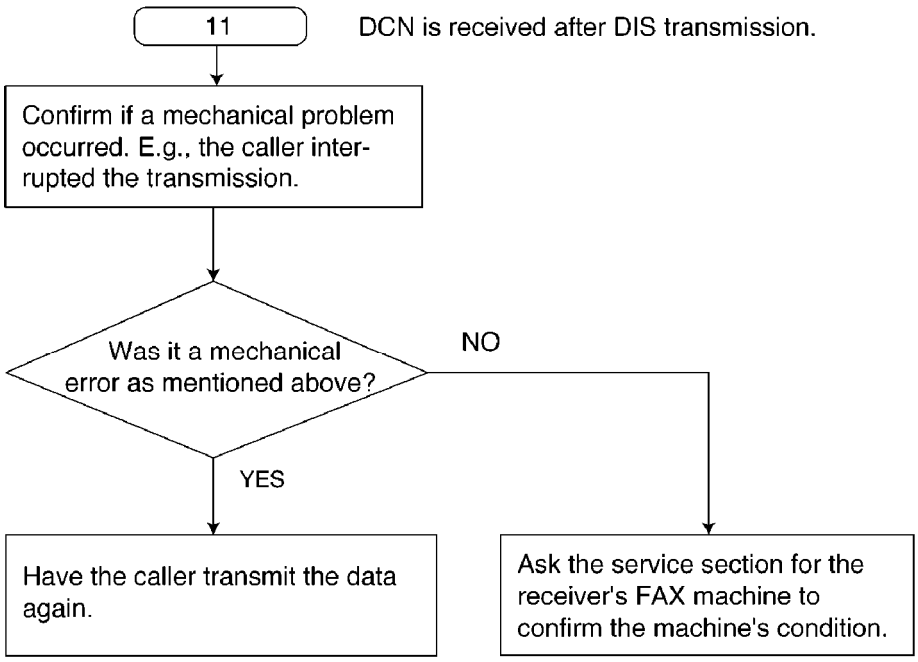
11
DCN is received after DIS transmission.
Confirm if a mechanical problem occurred. E.g., the caller interrupted the transmission.
Was it a mechanical error as mentioned above?
NO
YES
Have the caller transmit the data again.
Ask the service section for the receiver's FAX machine to confirm the machine's condition.

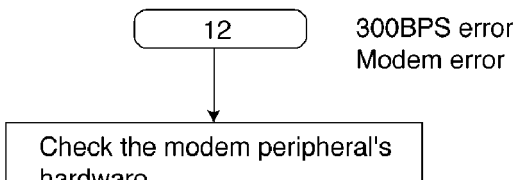
12
300BPS error
Modem error
Check the modem peripheral's

hardware.

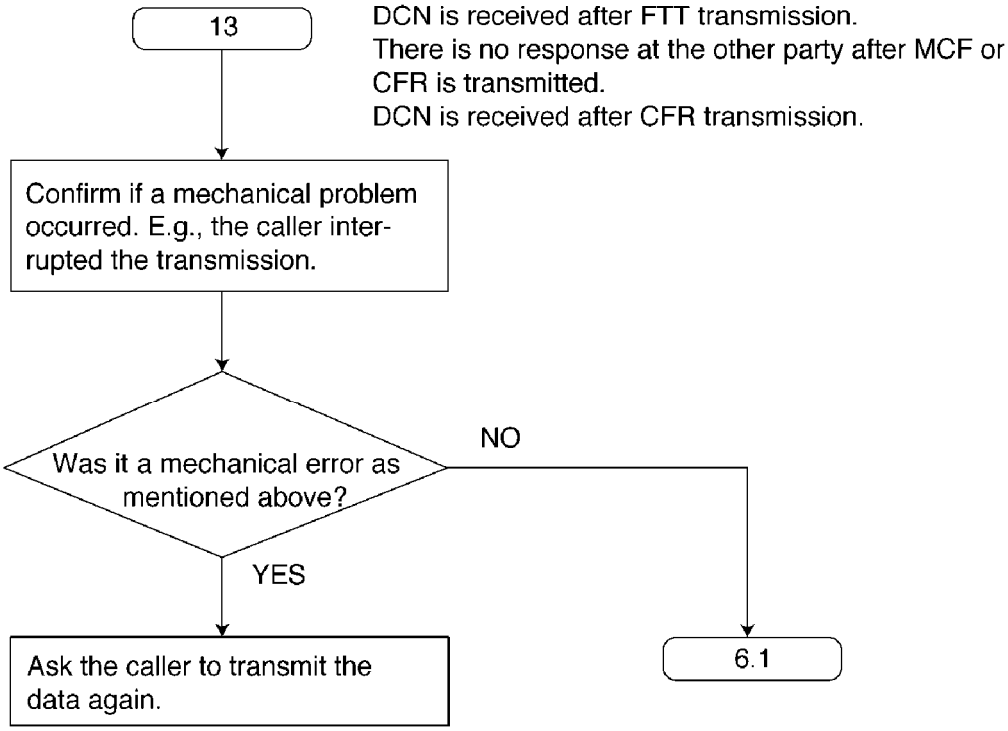
13
DCN is received after FTT transmission.
There is no response at the other party after MCF or CFR is transmitted.
DCN is received after CFR transmission.
Confirm if a mechanical problem occurred. E.g., the caller interrupted the transmission.
Was it a mechanical error as mentioned above?
NO
YES
Ask the caller to transmit the data again.
6.1

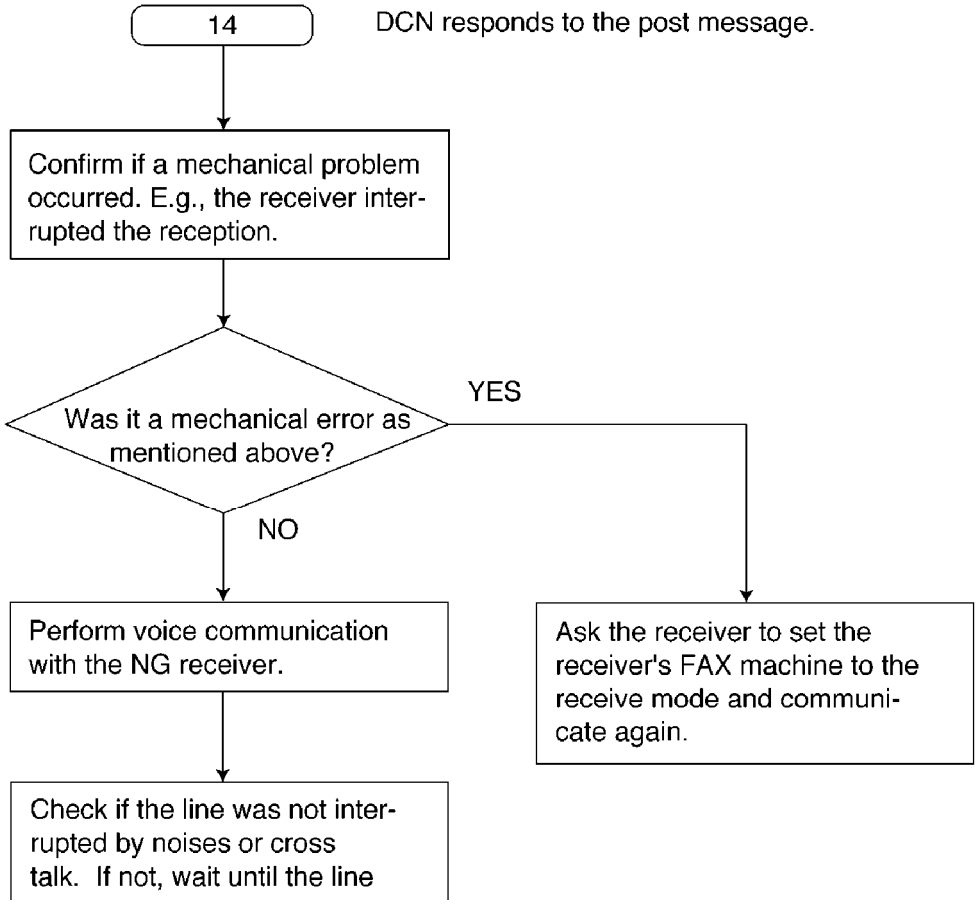
14
DCN responds to the post message.
Confirm if a mechanical problem occurred. E.g., the receiver interrupted the reception.
Was it a mechanical error as mentioned above?
YES
NO
Perform voice communication with the NG receiver.
Ask the receiver to set the receiver's FAX machine to the receive mode and communicate again.
Check if the line was not interrupted by noises or cross talk. If not, wait until the line

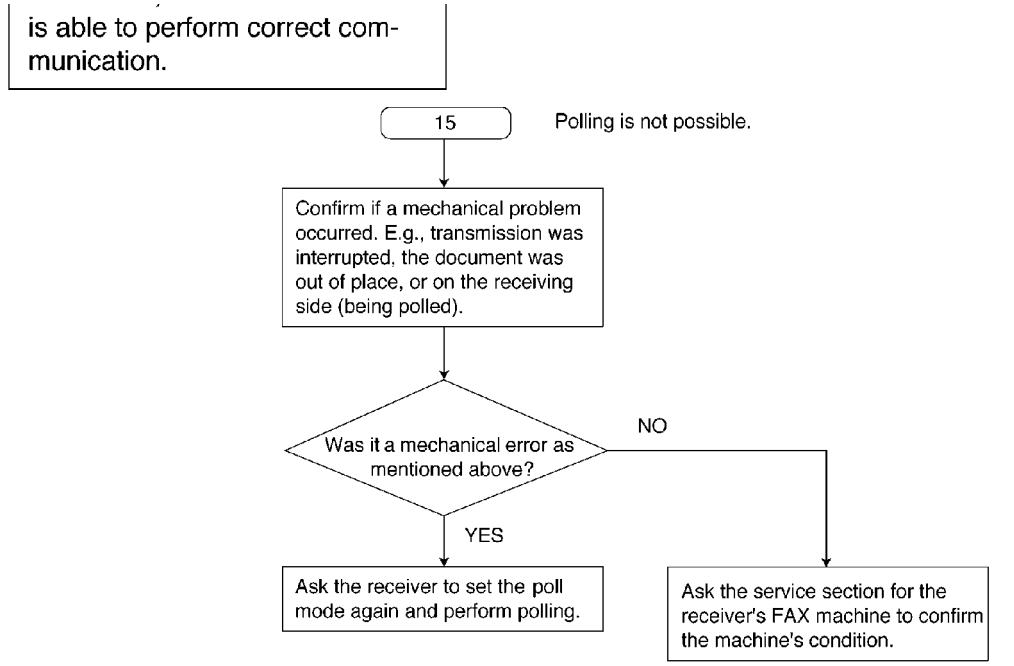

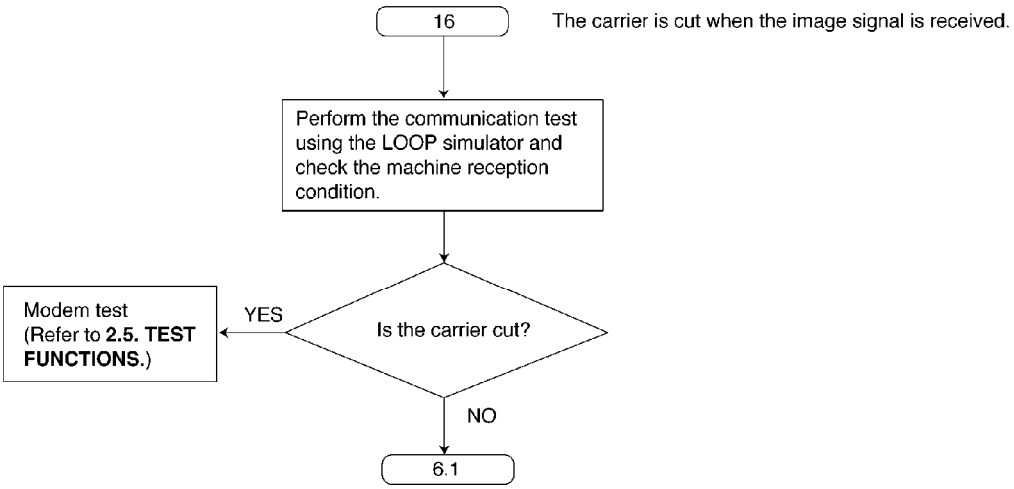

2.3.3.3.2. Remote programming

If, after the call is connected, the customer describes the situation and it is determined that the problem can be corrected by making parameter changes, this function makes it possible to change parameters such as the user code and service code from another fax (using DTMF tones). Therefore, travel to the customer's location is not required. However, it is not possible to change all the parameters remotely (2. Program mode table). The function used to accomplish this is remote programming.

First, in order to check the current status of the service code parameter, print out the setup list (code: 991) and the service list (code: 999) from the customer's fax machine.

Based on this, the parameters for the desired codes can be changed.

The procedure for changing and listing parameters is described on 1. Entering the remote programming mode and changing service codes. Also, before exiting the remote programming

mode, it is advisable to obtain a new list to confirm that the changes were made correctly.

Hint:
Since the connected telephone is in use during the remote programming mode, it may be helpful to ask the customer to switch to the speakerphone. This frees the customer from the need to remain right next to the fax while you are making parameter settings. When finished, inform the customer. Also note that in very noisy locations where the DTMF tones are not audible, the remote programming function will not work.

1. Entering the remote programming mode and changing service codes

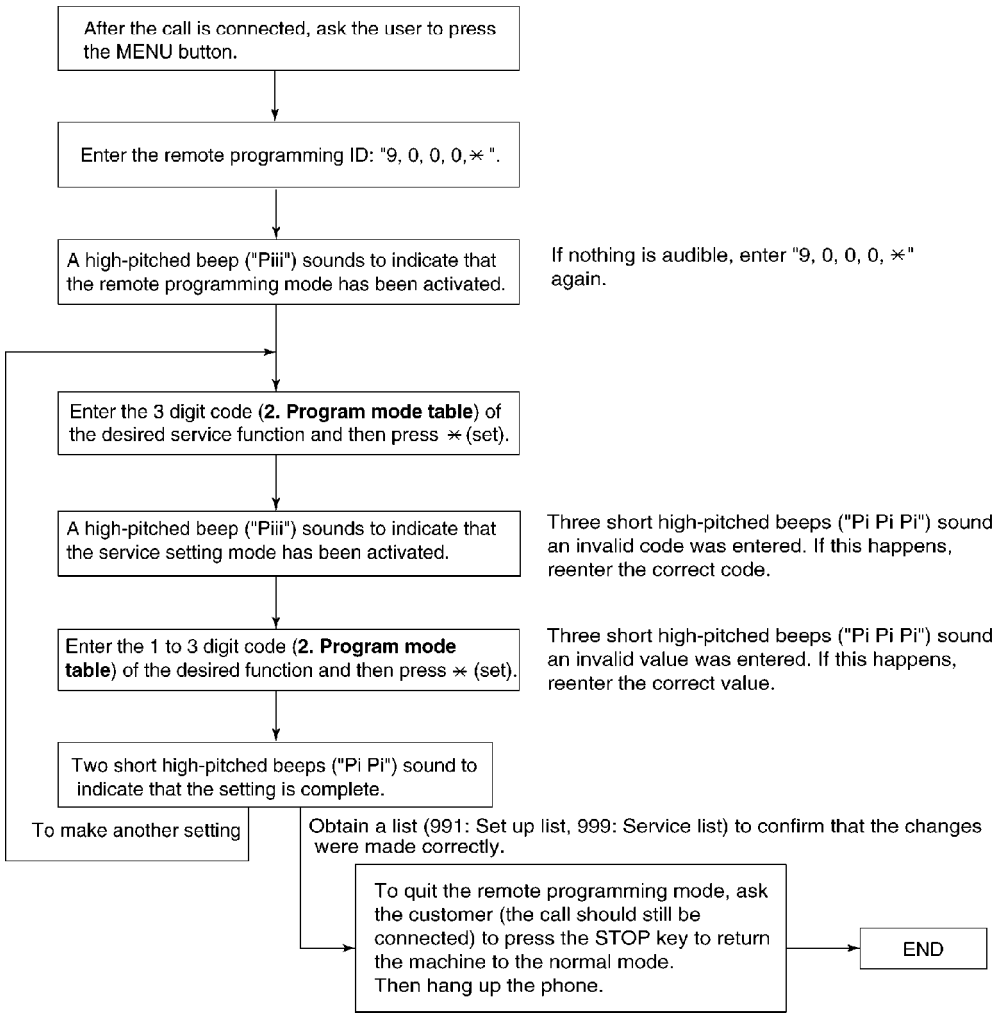

2. Program Mode Table

Code	Function	Set Value	Default	Remote Setting
001	Set date and time	mm/dd/yy hh:mm	Jan/01/99	NG
002	Your logo	---------	None	NG
003	Your telephone number	---------	None	NG
004	Transmission report mode	1:Error / 2:ON / 3:OFF	Error	OK
006	FAX ring count	1 to 5 rings (for ext. tam)	2	OK
012	Remote TAM activation	ON / OFF	OFF / ID=11	NG
013	Dialing mode	1:Pulse / 2:Tone / 3:Auto	Auto	OK
018	Film remain	---------	---------	NG
022	Auto journal print	1:ON / 2:OFF	ON	OK
023	Overseas mode	ON / OFF	OFF	OK
025	Delayed transmission	ON / OFF	OFF	NG
026	Auto caller ID list	1:ON / 2:OFF	ON	OK
030	Silent FAX recognition ring	3 to 6 rings	3	OK
031	Distinctive ring	1:OFF / 2:A / 3:B / 4:C / 5:D	OFF	OK
036	Rx reduction	1:72% / 2:86% / 3:92% / 4:OFF	92%	OK
039	LCD contrast	1:Normal / 2:Darker	Normal	NG
040	Silent detection	1:ON / 2:OFF	ON	OK
041	Remote FAX activation code	ON / OFF	ON ID=*9	NG
044	Receive alert	1:ON / 2:OFF	ON	OK
046	Friendly receive	1:ON / 2:OFF	ON	OK
049	Auto disconnect	ON / OFF	ON	NG
070	FAX pager	ON / OFF	OFF	NG
075	IQ-FAX	1:ON / 2:OFF	OFF	OK
076	FAX tone	1:ON / 2:OFF	ON	OK
077	Auto answer mode	1:FAX only 2:TEL/FAX	FAX only	OK
078	TEL/FAX ring	1 to 4 rings	2	OK
079	Film detection	1:ON / 2:OFF	ON	OK
080	Set default	YES / NO	NO	NG
501	Pause time set	001~600 x 100msec	050	OK
503	Dial speed	1:10pps / 2:20 pps	10pps	OK
511	Vox sense	1:High / 2:Low	High	OK
520	CED frequency select	1:2100Hz / 2:1100Hz	2100	OK
521	International mode select	1:ON / 2:OFF	ON	OK
522	Auto standby select	1:ON / 2:OFF	ON	OK
523	Receive equalizer select	1:ON / 2:OFF	OFF	OK
550	Memory clear	---------	---------	NG
551	ROM check	---------	---------	NG
552	DTMF signal tone test	ON / OFF	OFF	OK
553	Monitor on FAX communication	1:OFF / 2:Phase B / 3:ALL	OFF	OK
554	Modem test	---------	---------	NG
555	Scanner test	---------	---------	NG
556	Motor test	---------	---------	NG
557	LED test	---------	---------	NG
558	LCD test	---------	---------	NG
559	Document jam detection	1:ON / 2:OFF	ON	OK

Code	Function	Set Value	Default	Remote Setting
561	Key test	---------	---------	NG
570	Break % select	1:61% / 2:67%	61%	OK
571	ITS auto redial time set	00~99	14	OK
572	ITS auto redial line disconnection time set	001~999sec	30	OK
573	Remote turn-on ring number	01~99	15	OK
590	FAX auto redial time set	00~99	05	OK
591	FAX auto redial line disconnection time set	001~999sec	045	OK
592	CNG transmit select	1:OFF / 2:ALL / 3:AUTO	ALL	OK
593	Time between CED and 300 bps	1:75ms / 2:500ms / 3:1sec	75ms	OK
594	Overseas DIS detection	1:1st / 2:2nd	1st	OK
595	Receive error limit value	001~999	100	OK
596	Transmit level set	-15~00dBm	-10	OK
598	Receiving Sensitivity	20~48	43	OK
602	Warning list printing	1:ON / 2:OFF	ON	OK
700	EXT. TAM OGM Rec. time	01~99sec	10sec	OK
701	No voice detect time	01~99	50X100msec	OK
717	Transmit speed select	1:9600/ 2:7200/ 3:4800/ 4: 2400	9600bps	OK
718	Receive speed select	1:9600/ 2:7200/ 3:4800/ 4: 2400	9600bps	OK
719	Ringer off in TEL/FAX mode	1:ON / 2:OFF	ON	OK
721	Pause tone detect	1:ON / 2:OFF	ON	OK
722	Redial tone detect	1:ON / 2:OFF	ON	OK
745	Power on film feed	1:ON / 2:OFF	ON	OK
763	CNG detect time for friendly reception	1:10s / 2:20s / 3:30s	30s	OK
771	T1 timer	1:35s / 2:60s	35s	OK
815	Sensor & VOX test	---------	---------	NG
852	Print test pattern	---------	---------	NG
853	Top margin	1~9	---------	OK
854	Left margin	1~8	---------	OK
861	A4 size set	1:ON / 2:OFF	OFF	OK
880	History list	1:Start	---------	NG
890	TEL/FAX ring back tone	1:ON / 2:OFF	ON	OK
991	Setup list	1:Start	---------	OK
994	Journal list	1:Start	---------	OK
995	Journal 2 list	1:Start	---------	OK
996	Journal 3 list	1:Start	---------	OK
998	History list	1:Start	---------	OK
999	Service list	1:Start	---------	OK

OK means "can set".

NG means "can not set".

Note:
Refer to 2.4.4. SERVICE FUNCTION TABLE for descriptions of the individual codes.

Example:

If you want to set value in the "004 Transmission report mode", press the dial key number 1, 2 or 3 corresponding to the Set Value you want to select. (1:ERROR/2:ON/3:OFF)

2.3.3.4. Digital Board Section

When the unit fails to boot up the system, take the troubleshooting procedures very carefully. It may have a serious problem.
The symptom: No response when the power is turned on. (No LCD display, and keys are not accepted.)
The first step is to check the power source. If there is no problem with the power supply unit, the problem may lie in the digital unit (main board).
As there are many potential causes in this case (ASIC, DRAM, etc.), it may be difficult to specify what you should check first. If a mistake is made in the order of checks, a normal part may be determined faulty, wasting both time and money.
Although the tendency is to regard the problem as a serious one (IC malfunction, etc.), usually most cases are caused by solder faults (poor contact due to a tunnel in the solder, signal short circuit due to solder waste).

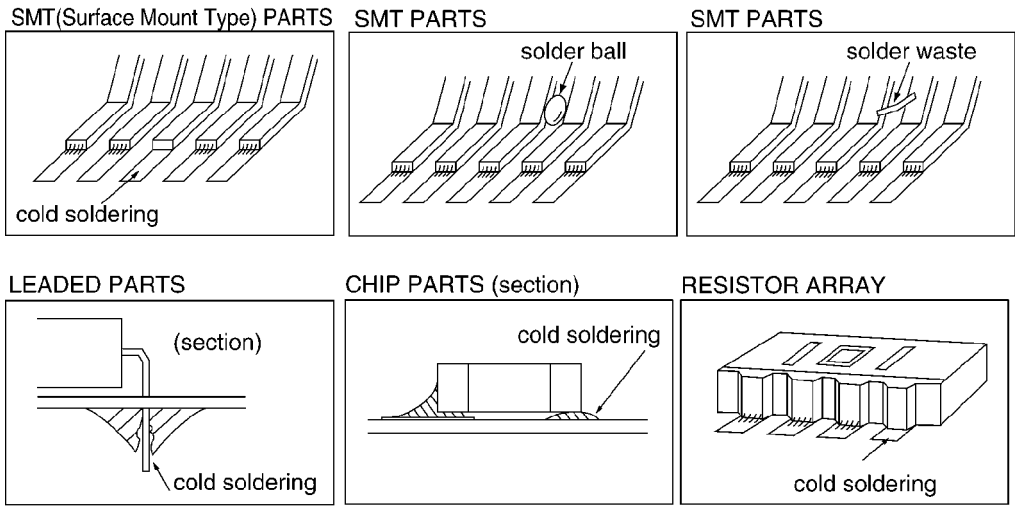

Note:

1. Electrical continuity may have existed at the factory check, but a faulty contact occurred as a result of vibration, etc., during transport.

2. Solder waste remaining on the board may get caught under the IC during transport, causing a short circuit.

Before we begin mass production, several hundred trial units are produced at the plant, various tests are applied and any malfunctions are analyzed. (In past experiences, digital IC (especially SRAM, DRAM and ROM) malfunctions are extremely rare after installation in the product.)
This may be repaired by replacing the IC, (DRAM etc.). However, the real cause may not have been an IC malfunction but a soldering fault instead.
Soldering faults difficult to detect with the naked eye are common, particularly for ASIC and RA (Resistor Array). But if you have an oscilloscope, you can easily determine the problem site or IC malfunction by checking the main signal lines.
Even if you don't have such a measuring instrument, by checking each main signal line and resoldering it, in many cases the problem will be resolved.
An explanation of the main signals (for booting up the unit) is presented below.

Don't replace ICs or stop repairing until checking the signal lines.
An IC malfunction rarely occurs. (By understanding the necessary signals for booting up the unit, the "Not Boot up" display is not a serious problem.)

What are the main signals for booting up the unit?
Please refer to 2.3.3.4.1. Digital Block Diagram.
The ASIC (IC501) controls all the other digital ICs. When the power is turned on, the ASIC retrieves the operation code stored in the ROM (IC502), then follows the instructions for controlling each IC. All ICs have some inner registers that are assigned to a certain address.
It is the address bus by which the ASIC designates the location inside each IC. And the data bus reads or writes the data in order to transmit the instructions from the ASIC to the ICs.
These signal lines are all controlled by voltages of 5V (H) or 0V (L).
2.3.3.4.1. Digital Block Diagram

You also need to check the signal lines listed here [List 1] when the unit fails to boot up the system. Those signal lines should remain normal. Other signal lines are not directly related to that failure even if they have faults or troubles.

[List 1]

①	D0～D7	(Data Bus)
②	A0～A15	(Address Bus)
③	$\overline{RD}$	(Read Signal)
	$\overline{ROMCS}$	(ROM Select Signal)
	$\overline{WR}$	(Write Signal)
	$\overline{RAMCS}$	(SRAM Select Signal)
④	RBA0～RBA5	(Bank Address Signal)
⑤	$\overline{RAS}$	(DRAM Row Address Strobe Signal)
	$\overline{CAS}$	(DRAM Column Address Strobe Signal)
⑥	$\overline{MDMCS}$	(Modem Select Signal)

As long as these signals remain normal, once the power is turned on, each IC can repeatedly output 5V (H) and 0V (L). The following shows NG and normal wave patterns.

NG Wave pattern **(Refer to NG EXAMPLE)**

0V never appears.

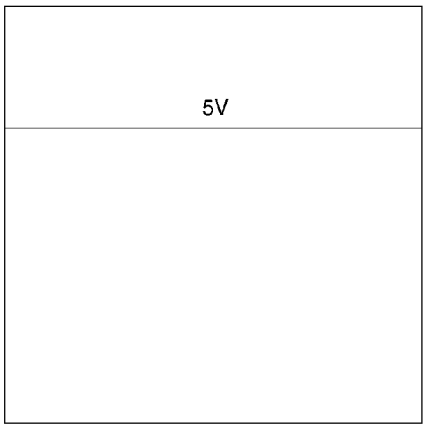

5V never appears.

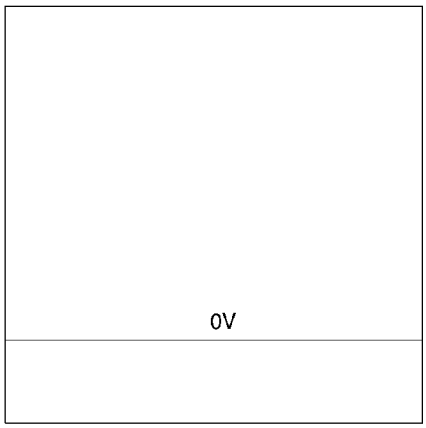

Short between D0 and D1
500ns/div, 1V/div

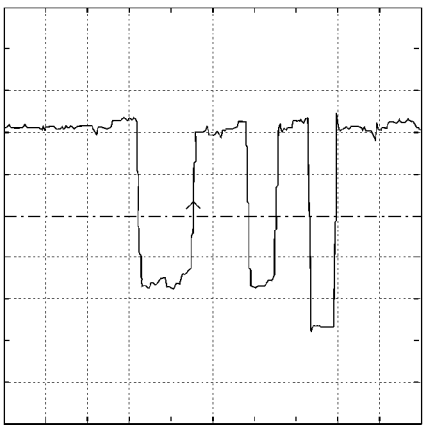

Normal Wave Patterns

① D0~D7 200ns/div, 1V/div

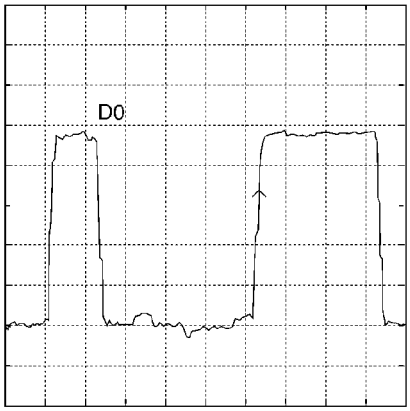

② A0~A5 200ns/div, 1V/div

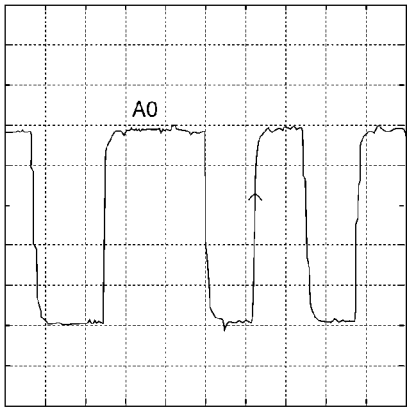

③ $\overline{RD}$ 100ns/div, 1V/div

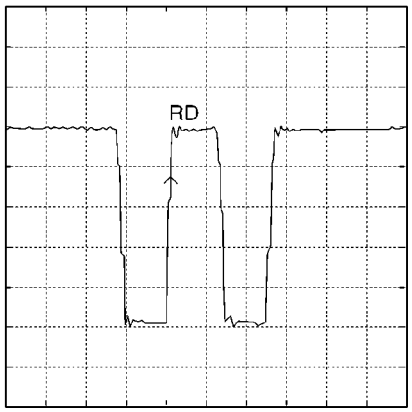

③ $\overline{ROMCS}$ 500ns/div, 1V/div

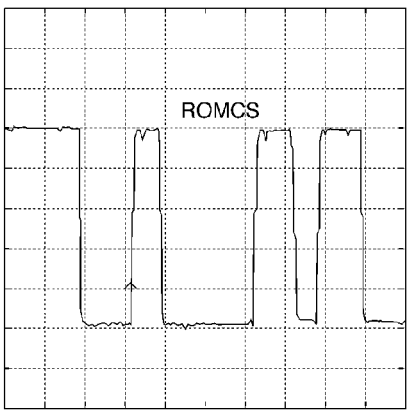

③ $\overline{RAMCS}$ 500ns/div, 1V/div

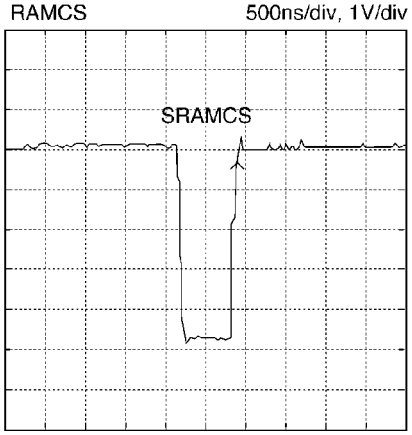

⑤ $\overline{RAS}$, $\overline{CAS}$ 100ns/div, 1V/div

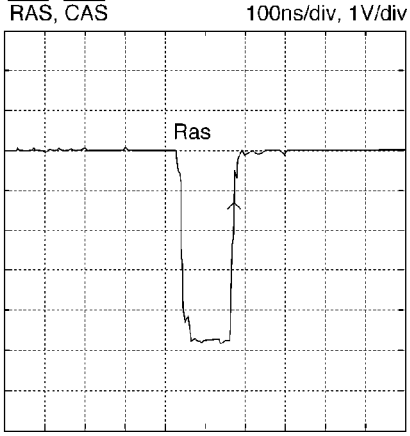

Remarks:
When you use an oscilloscope to judge whether a signal to be tested is normal or NG, perform the signal check in exactly the same order as in [List 1]. (If the ASIC fails to access the ROM, the ASIC cannot access SRAM or DRAM normally.)

The digital circuit actually operates according to the timing combinations of these signals. If the timing of these signals is even slightly delayed, the circuit will not work. Nor will it if the IC is

defective and the output voltage level is not normal although the timing of these signals is accurate enough to meet the specifications. (Make sure that your oscilloscope is calibrated before starting a test.)
Therefore, it is imperative to confirm whether each IC outputs the signal at the correct level. (See the I/O Pin No. Diagram.) The signal level should be constantly output at between 5V (H) and 0V (L) as described earlier.

Note:
Simply check the output level and make sure if the IC repeatedly outputs the signal at between 5V (H) and 0V (L).

I/O and Pin No. Diagram

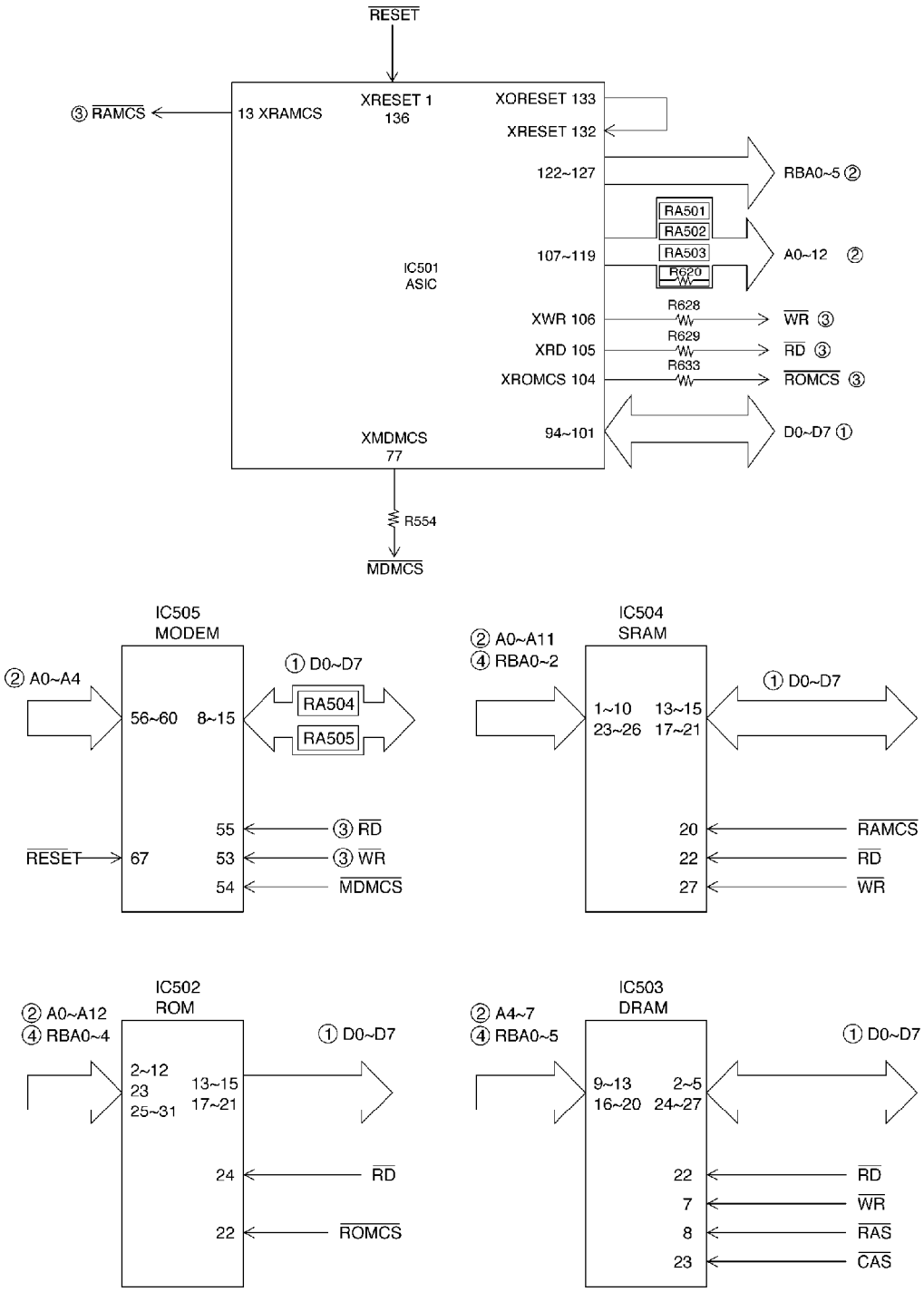

After the power is turned on, the ASIC initializes and checks each IC.
The ROM, SRAM, and modem are checked.
If initialization fails for the ICs , the system will not boot up.
In this case, please find the cause as follows.

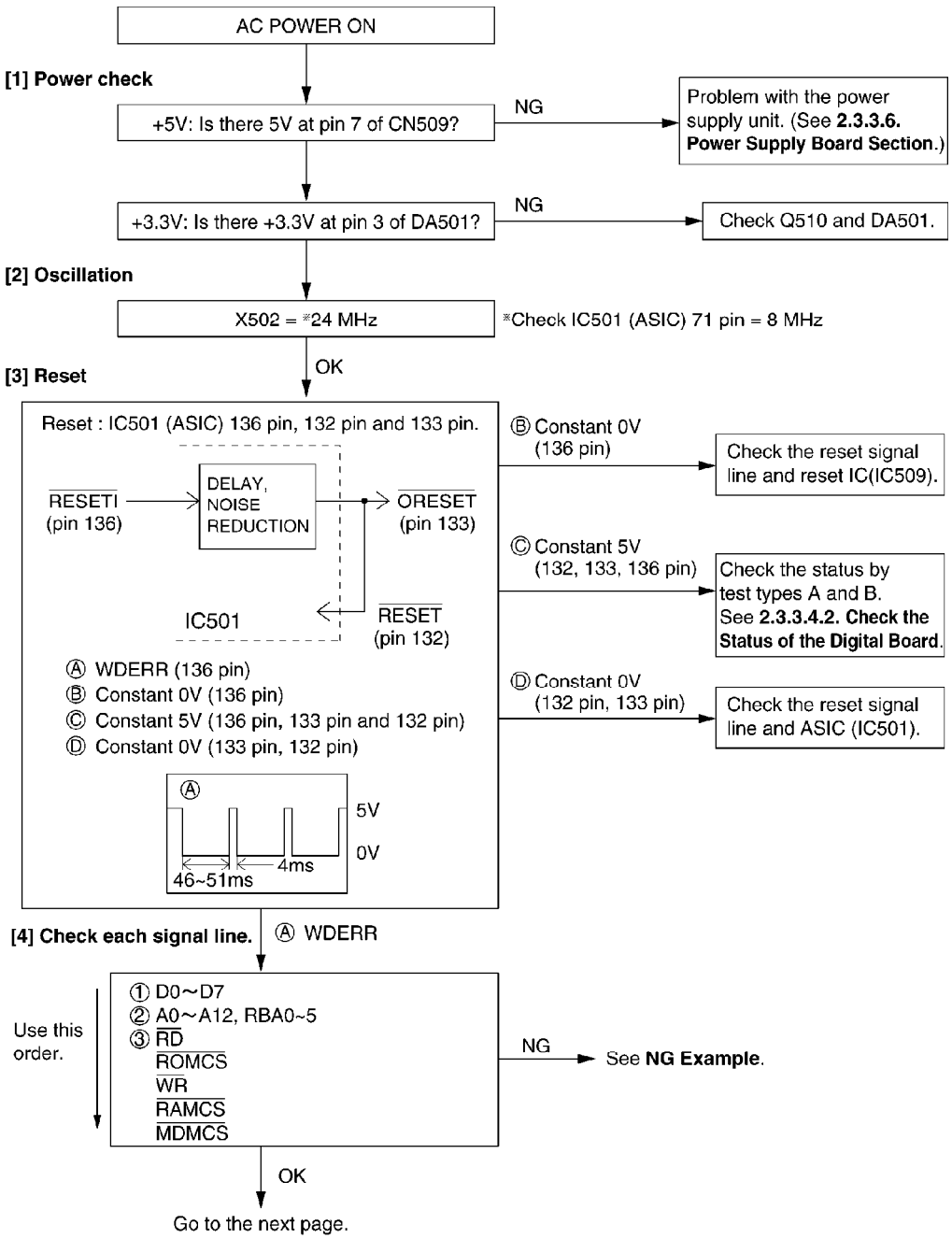
AC POWER ON
[1] Power check
+5V: Is there 5V at pin 7 of CN509?
NG
Problem with the power supply unit. (See 2.3.3.6. Power Supply Board Section.)
+3.3V: Is there +3.3V at pin 3 of DA501?
NG
Check Q510 and DA501.
[2] Oscillation
X502 = *24 MHz
*Check IC501 (ASIC) 71 pin = 8 MHz
[3] Reset
OK
Reset : IC501 (ASIC) 136 pin, 132 pin and 133 pin.
RESETI (pin 136)
DELAY, NOISE REDUCTION
ORESET (pin 133)
IC501
RESET (pin 132)
Ⓐ WDERR (136 pin)
Ⓑ Constant 0V (136 pin)
Ⓒ Constant 5V (136 pin, 133 pin and 132 pin)
Ⓓ Constant 0V (133 pin, 132 pin)
Ⓐ
5V
0V
4ms
46~51ms
Ⓑ Constant 0V (136 pin)
Check the reset signal line and reset IC(IC509).
Ⓒ Constant 5V (132, 133, 136 pin)
Check the status by test types A and B. See 2.3.3.4.2. Check the Status of the Digital Board.
Ⓓ Constant 0V (132 pin, 133 pin)
Check the reset signal line and ASIC (IC501).
[4] Check each signal line.
Ⓐ WDERR
Use this order.
① D0~D7
② A0~A12, RBA0~5
③ RD
ROMCS
WR
RAMCS
MDMCS
NG
See NG Example.
OK
Go to the next page.

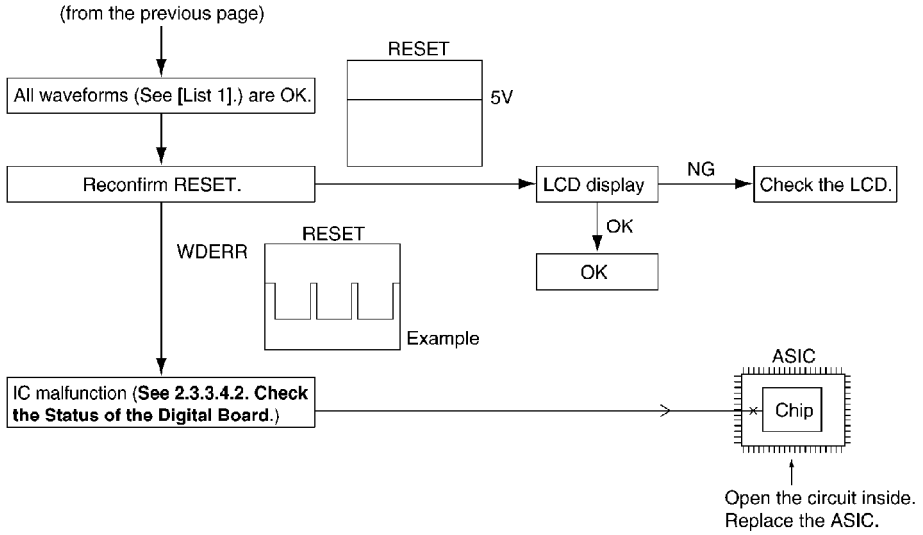

Other NG examples while the power is ON and the LCD displays the following.

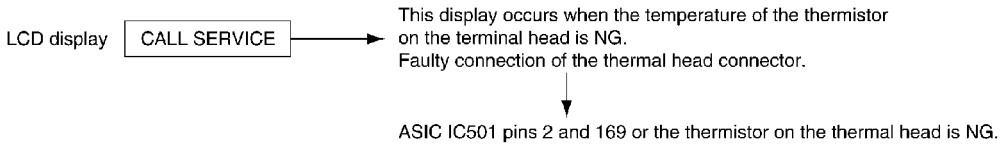

NG Example

1.

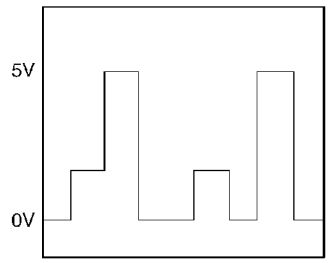

Short circuit from the adjacent signal wires.
Check for a short circuit in the RA and IC leads and the signal wire at the through hole.

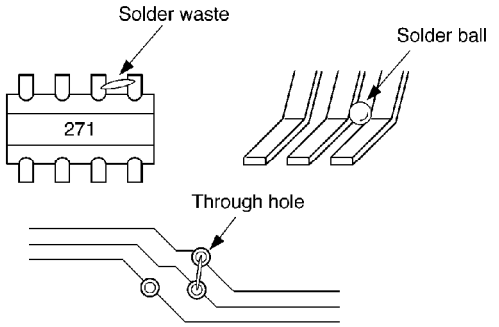

2.

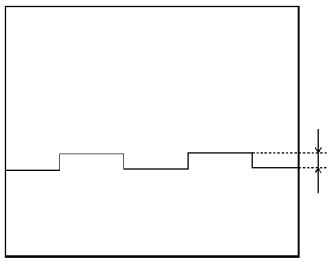

Short between the signal line and GND.

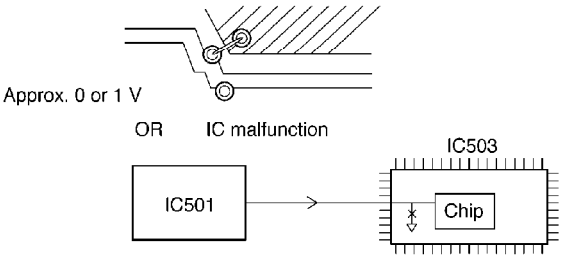

3.

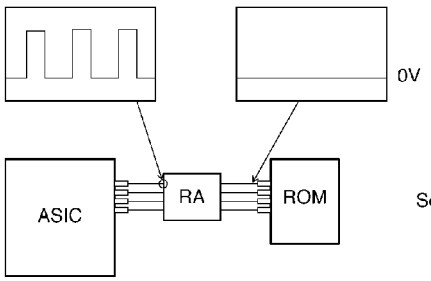

Solder fault on RA.

2.3.3.4.2. Check the Status of the Digital Board

Please check the status (voltage) of test lands **A** and **B**.
The result may tell you a defective point.

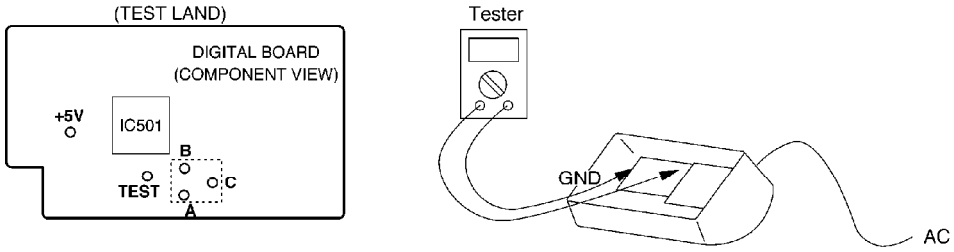

- Turn off the power supply.
- Short using a metallic object, such as tweezers, between the **TEST** point and **+5V** land, and turn on the AC power for a few seconds. And then remove a metallic object.
- Check the following voltages using an oscilloscope or tester.
- To cancel the status check mode, turn off the AC power.

Defective point	Check point voltage			Check items
	A	B	C	
RTC (IC501)	0V	0V	0V	IC501(RTC is included in IC501)
DRAM (IC503)	0V	5V	0V	IC503(8,23 pin), R630, R631, IC501(88, 89 pin), L506
MODEM (IC505)	5V	0V	5V	IC501(77 pin), IC505(53~55 pin), R555, L503, C547, R563, R554, RA504, RA505
ALL OK	5V	5V	5V	

•This indicates that the Add/Data Bus, RAM, ROM, MODEM, and ASIC are all connected to the ASIC properly and that control from the ASIC is possible.

Please check the soldering and conduction of these components.
If there is no problem, replace the ICs.

If you still have a problem with the digital board, please refer to **NG wave pattern**.

2.3.3.5. Analog Board Section

This chapter provides the testing procedures required for the analog parts. A signal route to be tested is determined depending upon purposes. For example, the handset TX route begins at the handset microphone and the signal is output to the telephone line. The signal mainly flowing on this route is analog. You can trace the signal with an oscilloscope. The signal flow on each route is shown in the Check Sheet here. If you find a specific problem in the unit, for example if you cannot communicate with the H/S, trace that signal route locally with the following Check Sheet and locate the faulty point.

CHECK SHEET

(SYMPTOM) CHECK ITEMS	IN → Signal → ROUTE → OUT
MONITOR	TEL LINE-T101-C126-R131-IC101(6-7)-C129-CN101(8)- {CN501(8)-C594-R596-IC511(23-34)-R588-IC501(42-41)-C858-IC511(32-35)-C552-R559-IC507(4-5, 8)} -SPEAKER
HANDSET Tx	HS MIC ┬CN105(4)-CN102(8)- {CN502(8)-R584-C587┬IC511(14, 15-22)-CN501(10)}-CN101(10)-C131- └CN105(1)-CN102(9)- {CN502(9)-R585-C579┘ R137-IC101(2-1)-C133-R125-T101-TEL LINE
HANDSET Rx	TEL LINE-T101-C126-R131-IC101(6-7)-C129-CN101(8)- {CN501(8)-C594-R596-IC511(23-34)-R588-IC501(42-41)-C858-IC511(32-10, 11)┬CN502(6)} -CN102(6) —— CN105(2)┬HS SPEAKER └CN502(7)} -CN102(7)-C148-CN105(3)┘
DTMF Monitor – Speaker	{IC505(44)-C599-R601-IC511(24-34)-R588-IC501(42-41)-C858-IC511(32-35)-C552-R559-IC507(4-5, 8)-CN503(1, 2)} -SPEAKER
DTMF Monitor – Handset	{IC505(44)-C599-R601-IC511(24-34)-R588-IC501(42-41)-C858-IC511(32-10, 11) ┬CN502(6)} -CN102(6) —— CN105(2)┬HS SPEAKER └CN502(7)} -CN102(7)-C148-CN105(3)┘
DTMF for TEL Line FAX Tx	{IC505(44)-C599-R601-IC511(24-22)-CN501(10)} -CN101(10)-C131-R137-IC101(2-1)-C133-R125-T101-TEL LINE
Dummy Ring Back tone	{IC501(38)-R550-C591-R589-IC511(27-22)} - {CN501(10)} -CN101(10)-C131-R137-IC101(2-1)-C133-R125-T101-TEL LINE
Ringing/ Alarm/Beep/ Key tones	{IC501(38)-R550-C591-R589-IC511(27-34)-R588-IC501(42-41)-C858-IC511(32-35)-C552-R559-IC507(4-5, 8)-CN503(1, 2)} -SP EAKER

Note:
{ }: Inside the digital board

(SYMPTOM) CHECK ITEMS	IN → Signal → ROUTE → OUT
CNG/DTMF detection	TEL LINE-T102-CN101(9)- {CN501(9)-C596-R595-IC511(20-31)-R600-C582-R580-IC505(45)}
VOX	TEL LINE-T102-CN101(9)- {CN501(9)-C596-R595-IC511(20-21)-C610-R613-Q513(B-C)-C581-R582-IC511(7-5)-IC501(36)}
FAX Rx	TEL LINE-T101-C126-R131-IC101(6-7)-C129-CN101(8)- {CN501(8)-C594-R596-IC511(23-31)-R600-C582-R580-IC505(45)}
Caller ID	TEL LINE-T102-CN101(9)- {CN501(9)-C596-R595-IC511(20-21)-C610-R613-Q513(B-C)-Q514(E-C)-C611-R624-IC511(23-31)-R600-C582-R580-IC505(45)}

Note:
{ }: Inside the digital board

1. Defective ITS (Integrated Telephone System) Section

A. No handset and speakerphone transmission / reception

Perform a signal test in the ITS or the NCU section and locate a defective point (where the signal disappears) on each route between the handset microphone and telephone line (sending), or between the telephone line and the handset speaker (receiving), or between the microphone and the telephone line (sending), or between the telephone line and the speaker (receiving). Check the components at that point. "CHECK SHEET" in 2.3.3.5. Analog Board Section is useful for this investigation.

B. No pulse dialing

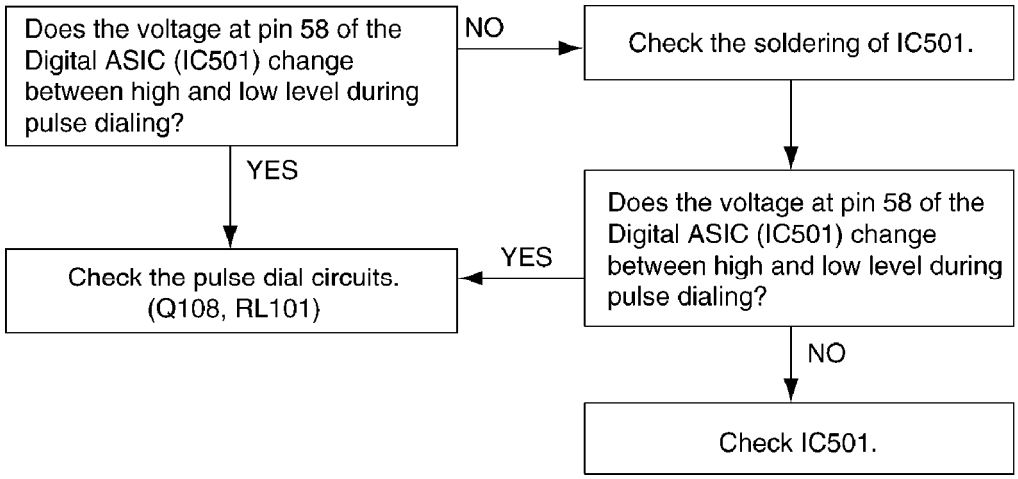

C. No ring tone (or No bell)

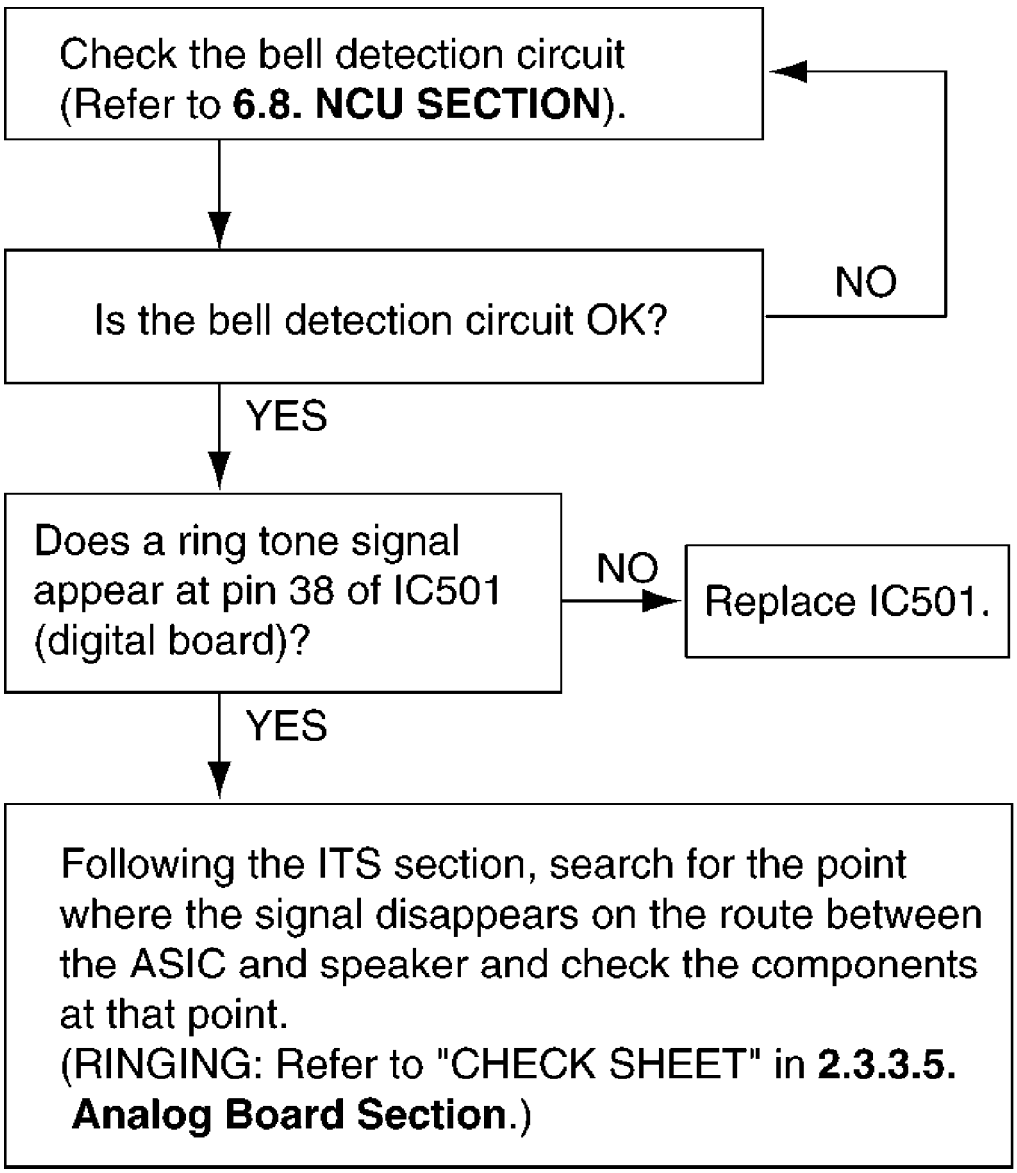

D. No tone dialing

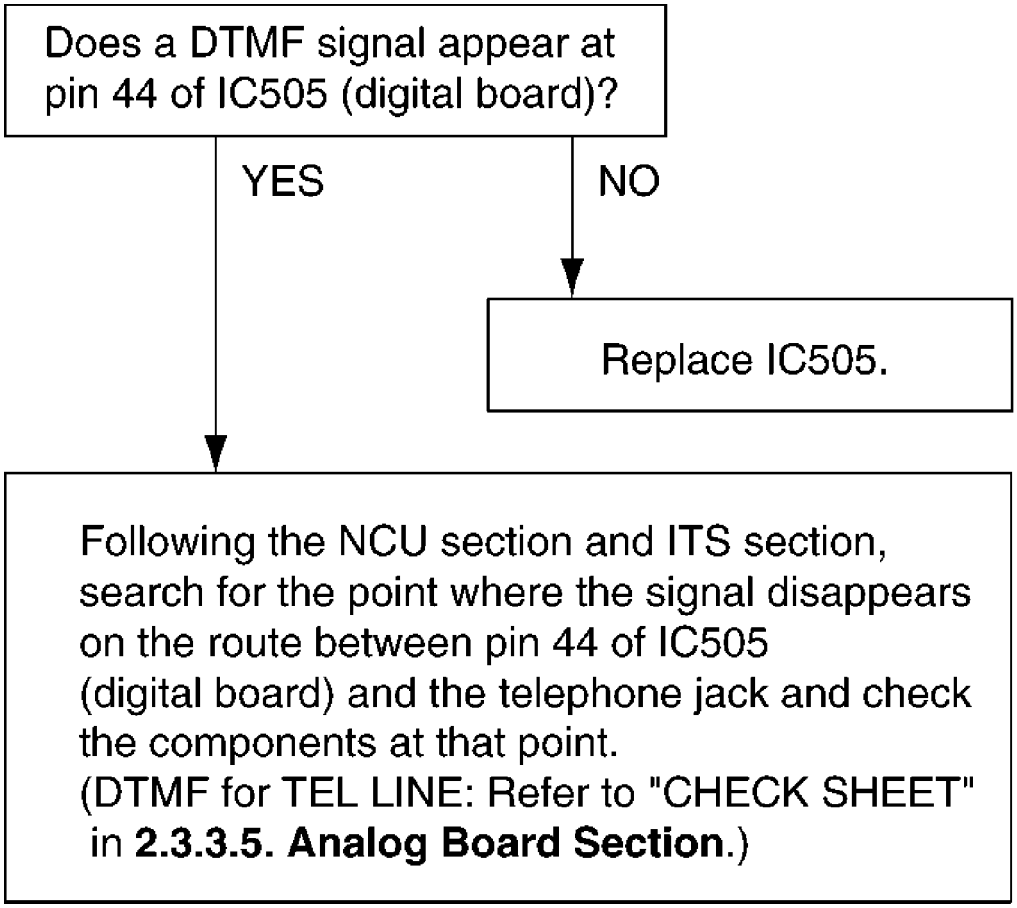

2. Defective TAM Interface Section

A. The FAX turns on, but does not arrive through TAM.

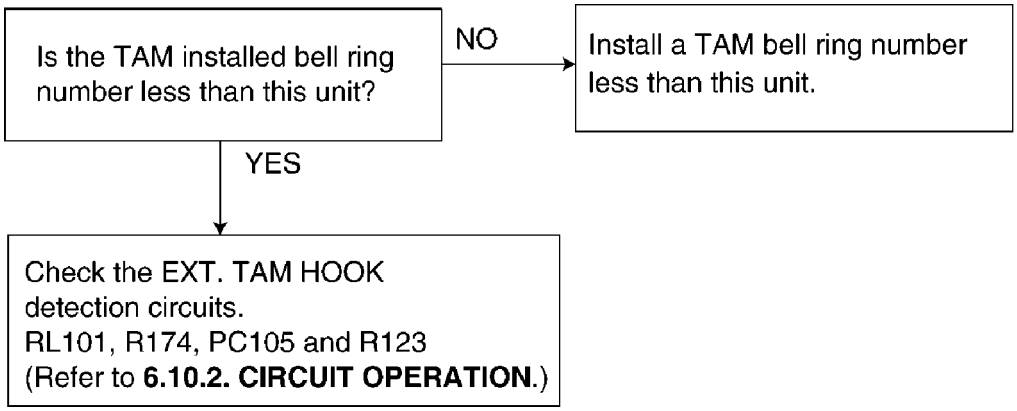

B. A FAX is received, but won't switch from TAM to FAX.

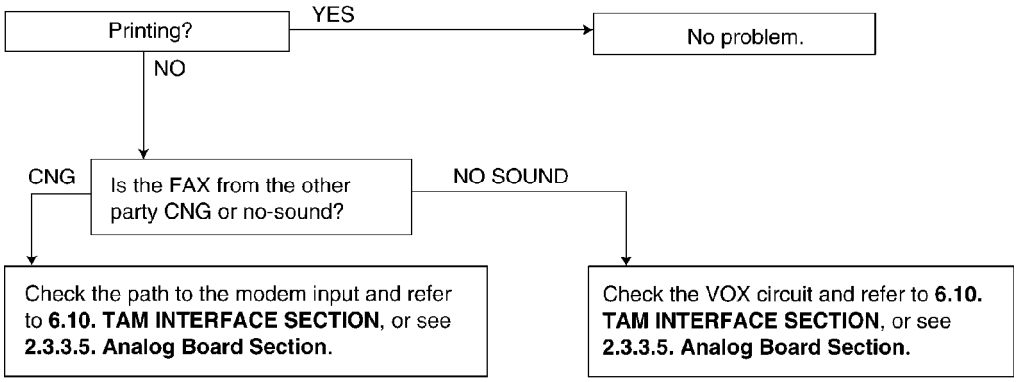

C. A voice is coming in but the unit switches to the FAX.

Check the VOX circuit and refer to **6.10. TAM INTERFACE SECTION**, or see **2.3.3.5. Analog Board Section**.

2.3.3.6. Power Supply Board Section

1. Key components for troubleshooting

Check the following parts first: F101, D101-D104, C106, Q101, PC101 and IC101.

This comes from our experience with experimental tests. For example: power supply and lightning surge voltage test, withstanding voltage test, intentional short circuit test, etc.

Caution:

If you find a melted fuse in the unit, do not turn on the power until you locate and repair the faulty parts (except for the fuse); otherwise the fuse will melt again and you cannot pinpoint the faulty point.

In most cases, the symptom is that nothing is output. It is more likely that the fault is in the primary side rather than the secondary side. Check the primary side first.

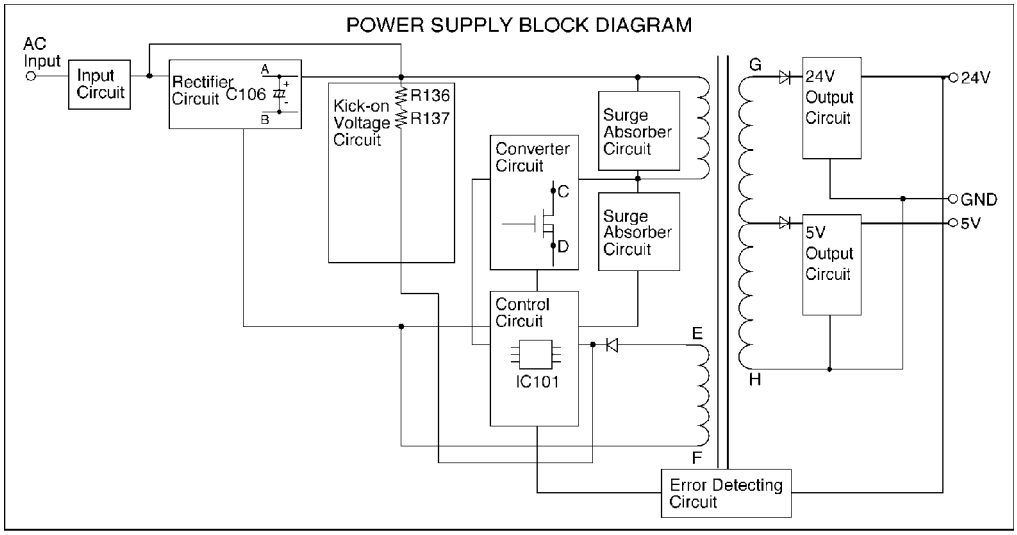

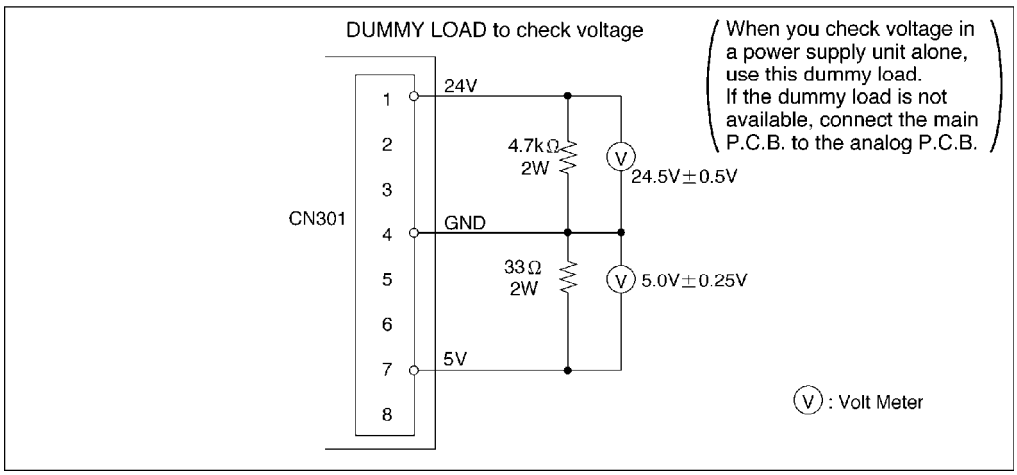

2. Troubleshooting Flow Chart

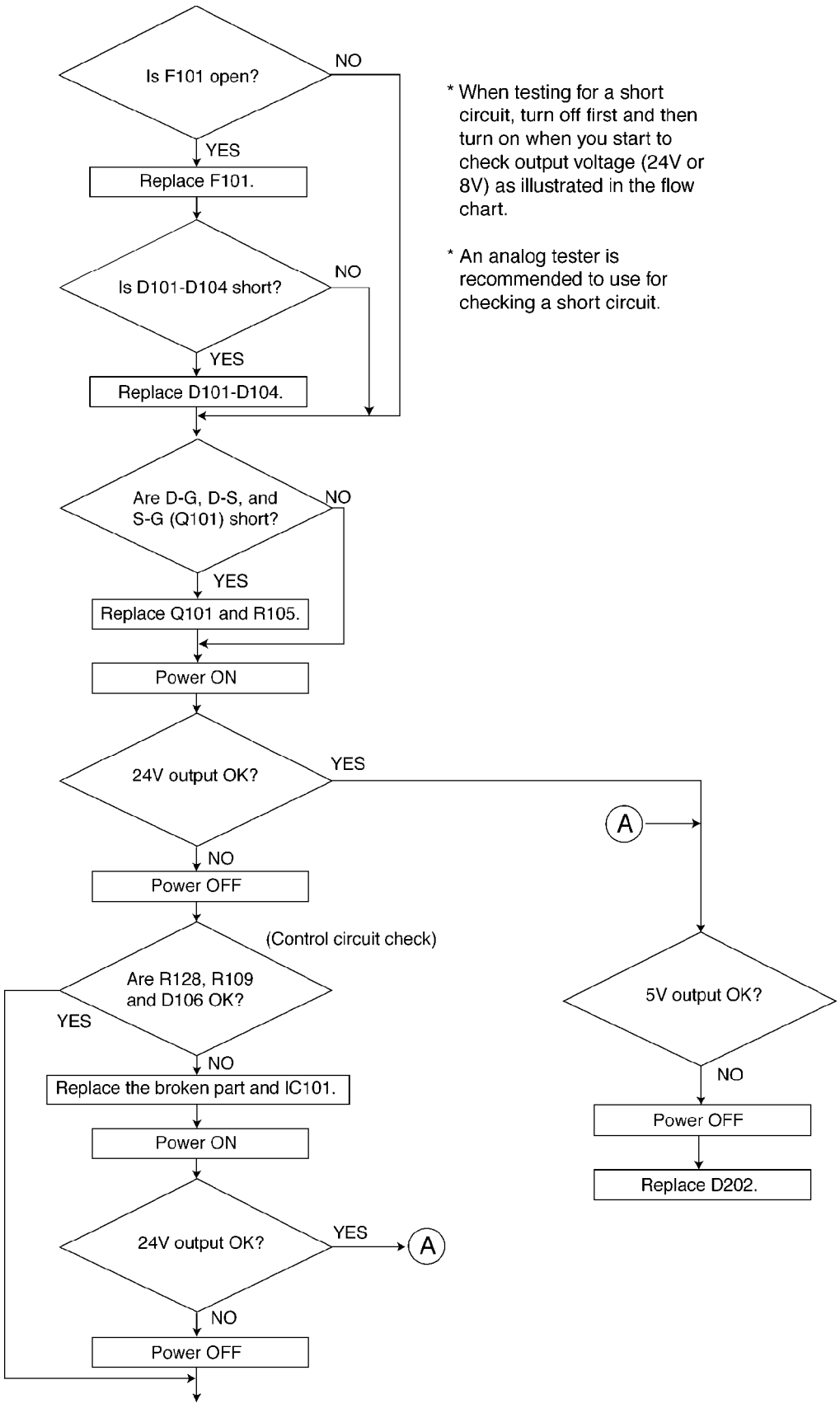
Is F101 open?
NO
YES
Replace F101.
Is D101-D104 short?
NO
YES
Replace D101-D104.
Are D-G, D-S, and S-G (Q101) short?
NO
YES
Replace Q101 and R105.
Power ON
24V output OK?
YES
NO
Power OFF
(Control circuit check)
Are R128, R109 and D106 OK?
YES
NO
Replace the broken part and IC101.
Power ON
24V output OK?
YES
A
NO
Power OFF
A
5V output OK?
NO
Power OFF
Replace D202.
* When testing for a short circuit, turn off first and then turn on when you start to check output voltage (24V or 8V) as illustrated in the flow chart.
* An analog tester is recommended to use for checking a short circuit.

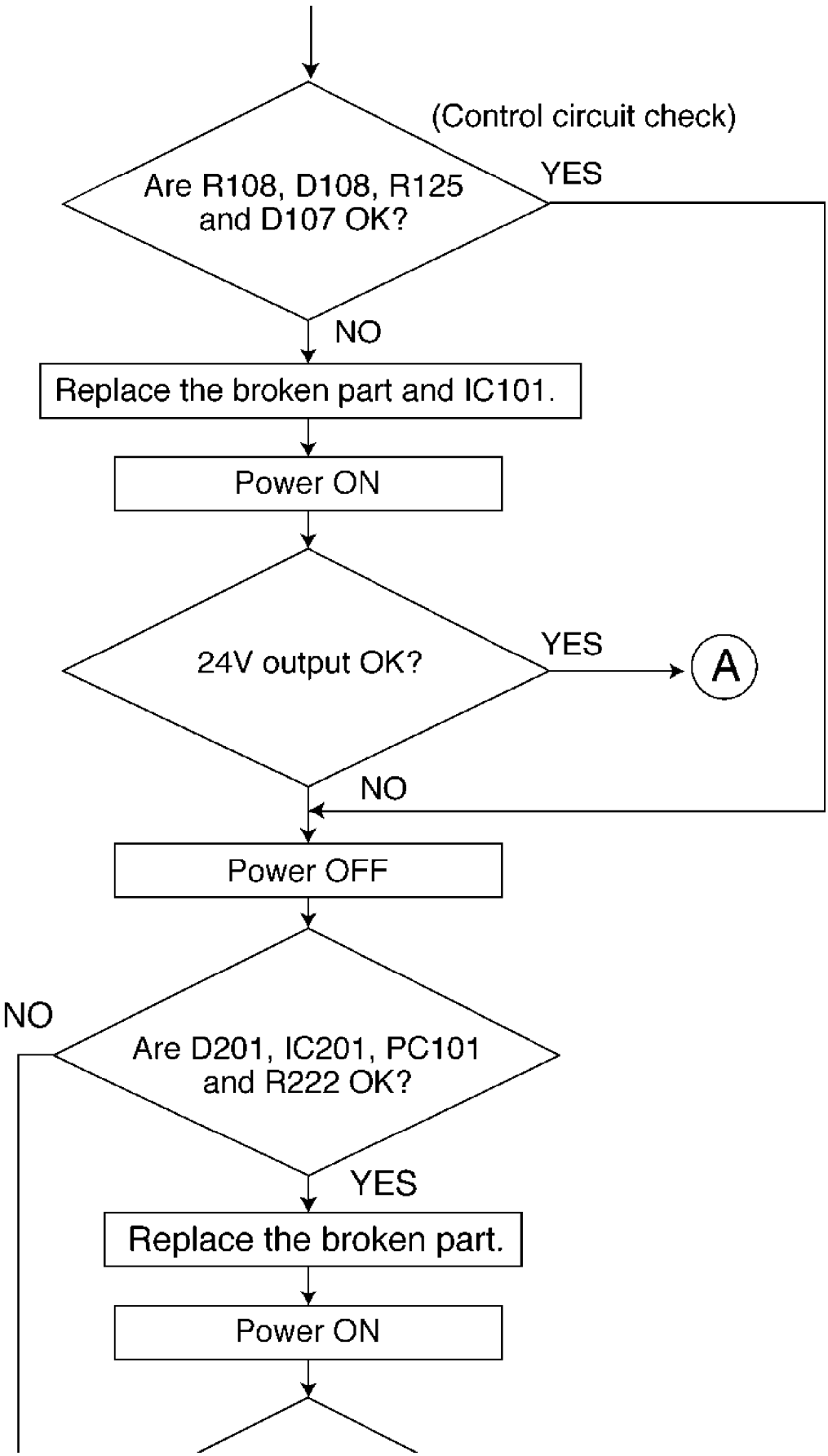
(Control circuit check)
Are R108, D108, R125 and D107 OK?
YES
NO
Replace the broken part and IC101.
Power ON
24V output OK?
YES
A
NO
Power OFF
NO
Are D201, IC201, PC101 and R222 OK?
YES
Replace the broken part.
Power ON

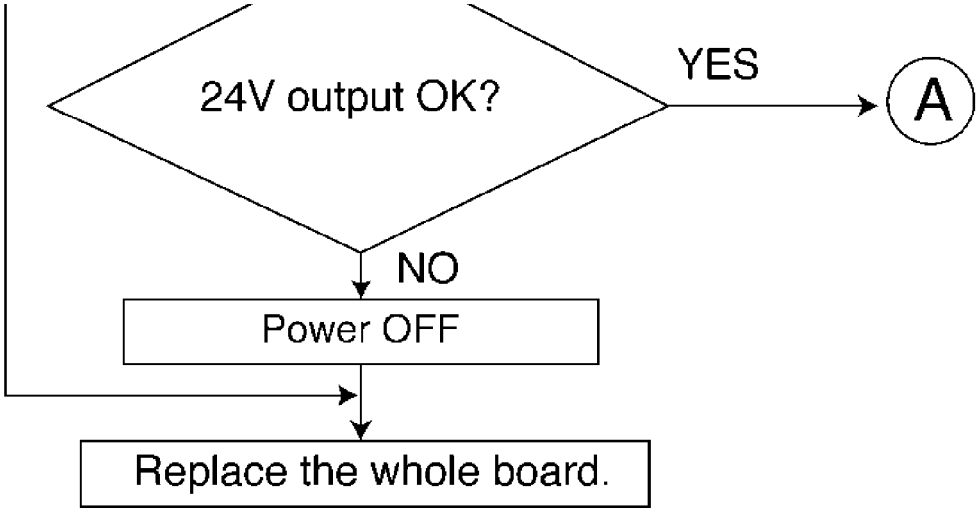

3. Broken parts repair details

(D101, D102, D103, D104)

Check for a short-circuit in terminal 4. If D101, D102, D103 and D104 are short-circuited, F101 will melt (open).

In this case, replace all of the parts (D101, D102, D103, D104, F101).

(Q101)

The worst case of Q101 is a short-circuit between the Drain and Gate because damage expands to the peripheral circuit of Q101.

This is due to a very high voltage through the Gate circuit which is composed of R128, R109, D106 and IC101.

You should change all of the parts listed as follows.

F101, Q101, R128, R109, D106, IC101

(D201)

If D201 is broken, the oscillation circuit in the power supply cannot operate. Check it with an electric tester.

2.3.3.7. Operation Panel Section

1. No key operation

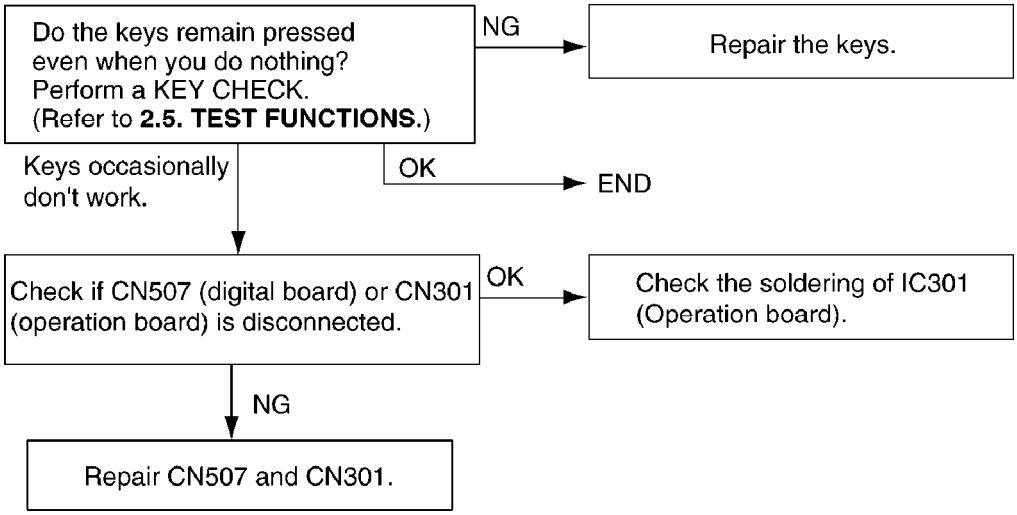

2. No LCD indication

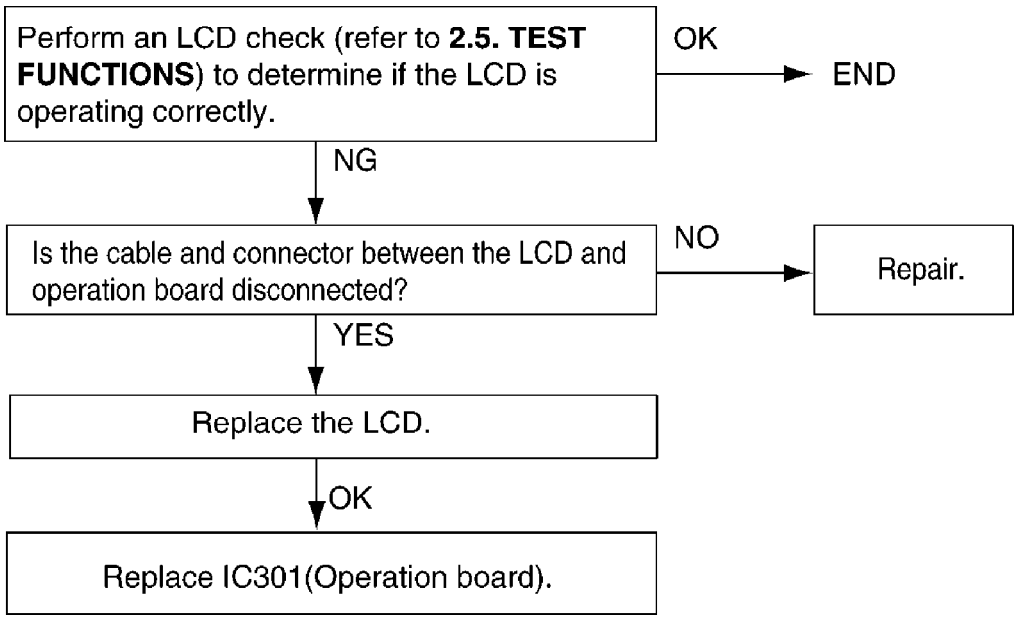

2.3.3.8. Sensor Board Section (Refer to 6.5. SENSORS AND SWITCHES for the circuit descriptions.)

The Test Function makes the sensor circuit check easier. (Refer to 2.5. TEST FUNCTIONS.) / For example, as for "COVER OPEN SENSOR", "CO" is turned ON/OFF on the display when you open or close the front cover. Also, document sensor, read position sensor, recording paper sensor and jam sensor are turned ON/OFF by the copy operation. Therefore, each sensor can be checked for proper mechanical operation. / As for the electric check, check whether each voltage is right or not with following flowchart turning each sensor lever ON/OFF manually.

1. Check the read position sensor (PS302)....."REMOVE DOCUMENT"

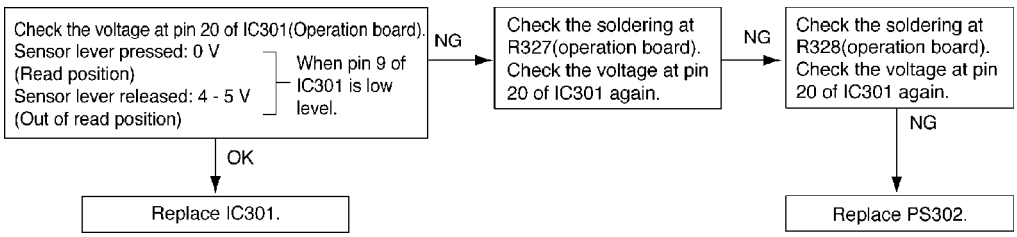

2. Check the document sensor (PI302)....."CHECK DOCUMENT"

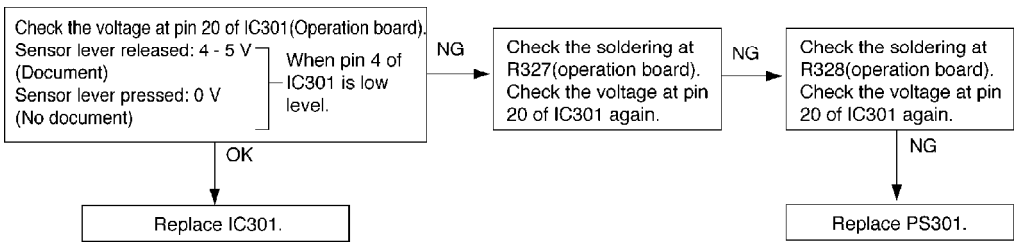

3. Check the cover open sensor (PI303)....."CHECK COVER"

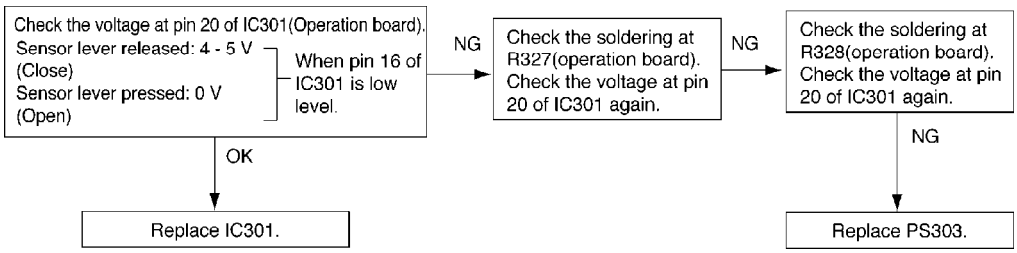

4. Check the hook switch (SW401)

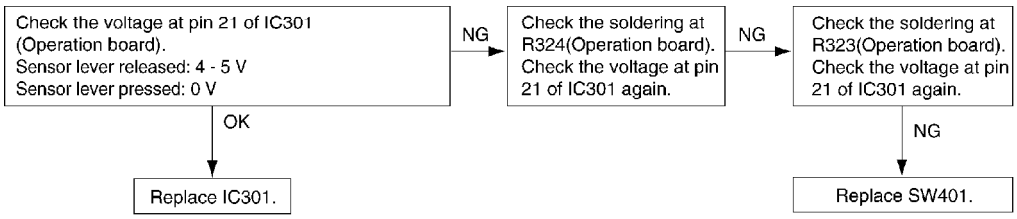

5. Check the paper top sensor (PS502)....."PAPER JAMMED"

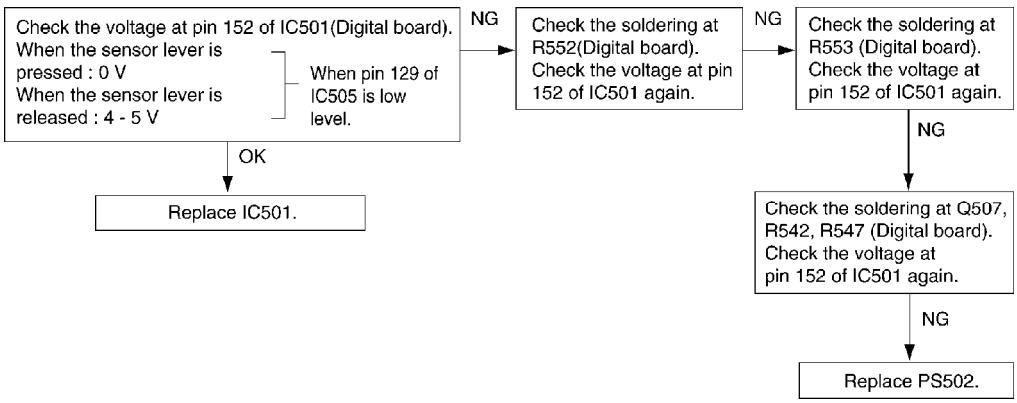

6. Check the film end sensor (PS501)....."FILM EMPTY"

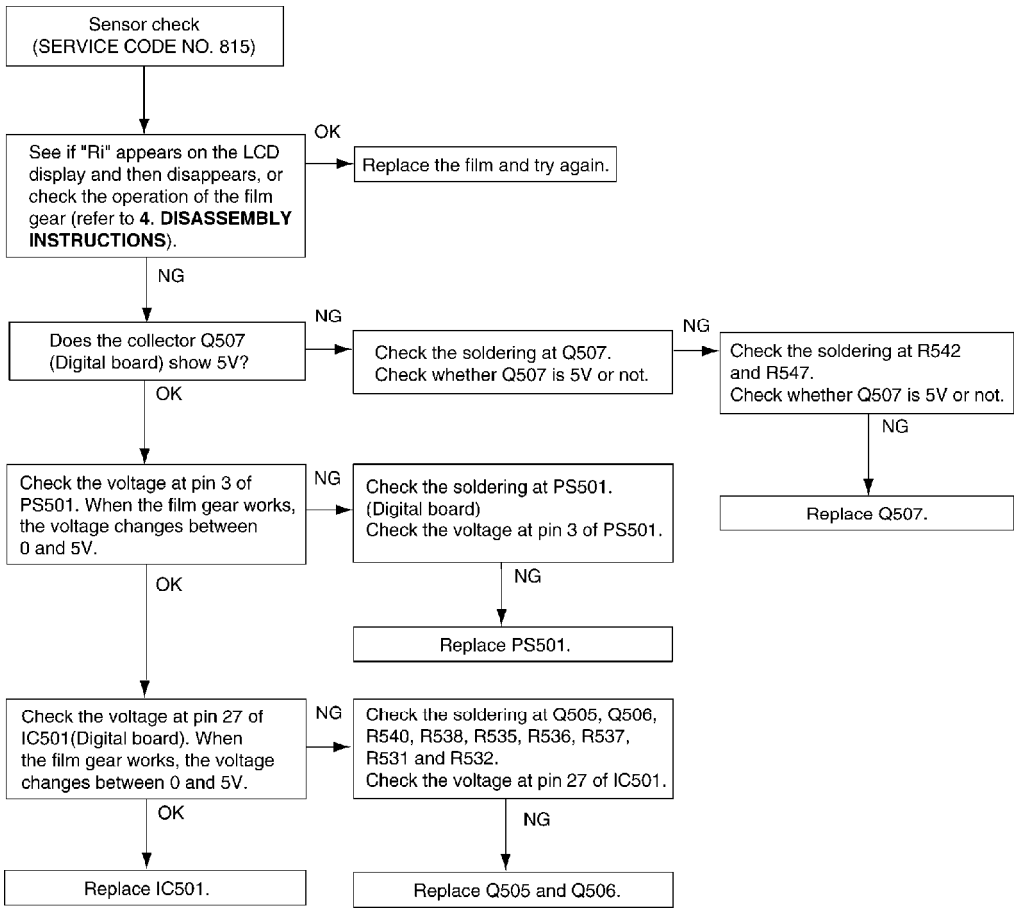

2.3.3.9. CIS (Contact Image Sensor) Section

Refer to 6.4.4. SCANNING BLOCK.

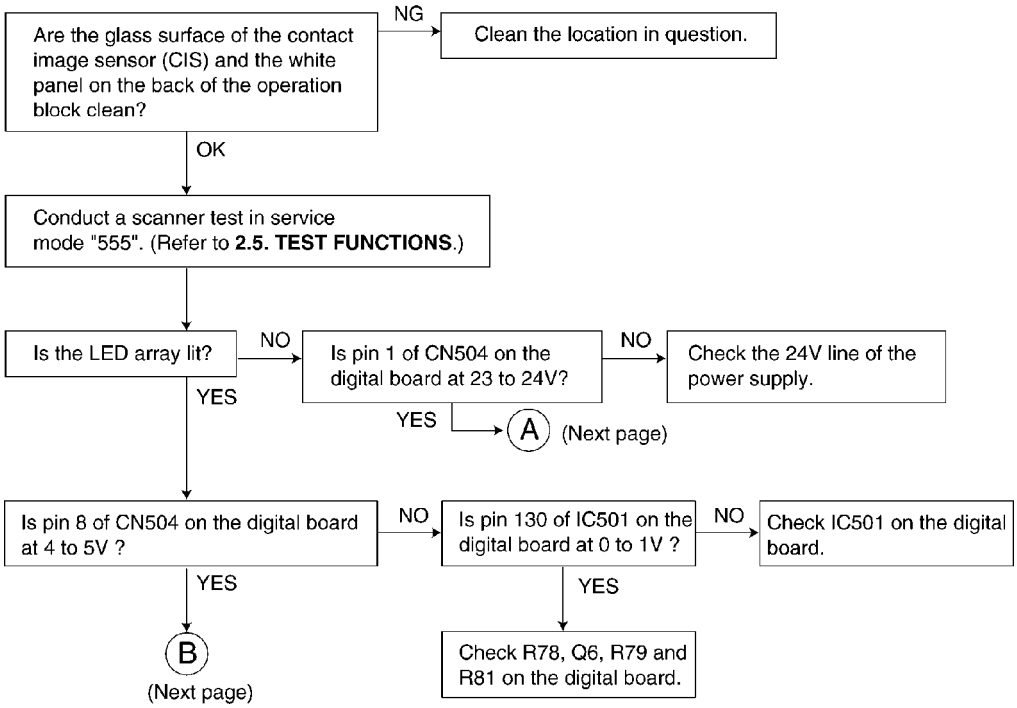
Are the glass surface of the contact image sensor (CIS) and the white panel on the back of the operation block clean?
NG
Clean the location in question.
OK
Conduct a scanner test in service mode "555". (Refer to **2.5. TEST FUNCTIONS**.)
Is the LED array lit?
NO
Is pin 1 of CN504 on the digital board at 23 to 24V?
NO
Check the 24V line of the power supply.
YES
YES
A
(Next page)
Is pin 8 of CN504 on the digital board at 4 to 5V ?
NO
Is pin 130 of IC501 on the digital board at 0 to 1V ?
NO
Check IC501 on the digital board.
YES
YES
B
(Next page)
Check R78, Q6, R79 and R81 on the digital board.

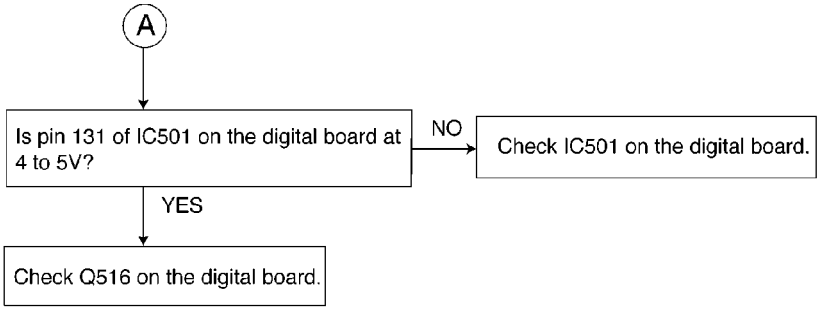

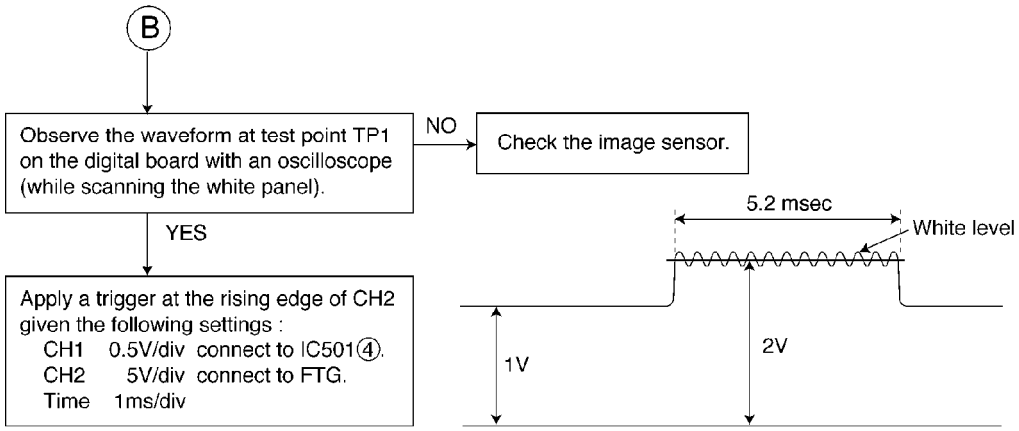

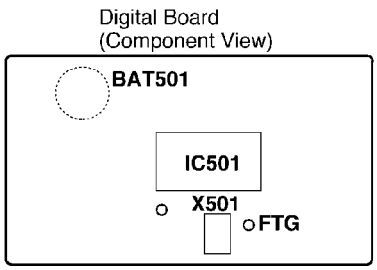

(Refer to 8.2. PRINTED CIRCUIT BOARD (DIGITAL BOARD FOR: PFUP1129Z).)

2.3.3.10. Thermal Head Section (Refer to 6.4.3. THERMAL HEAD.)

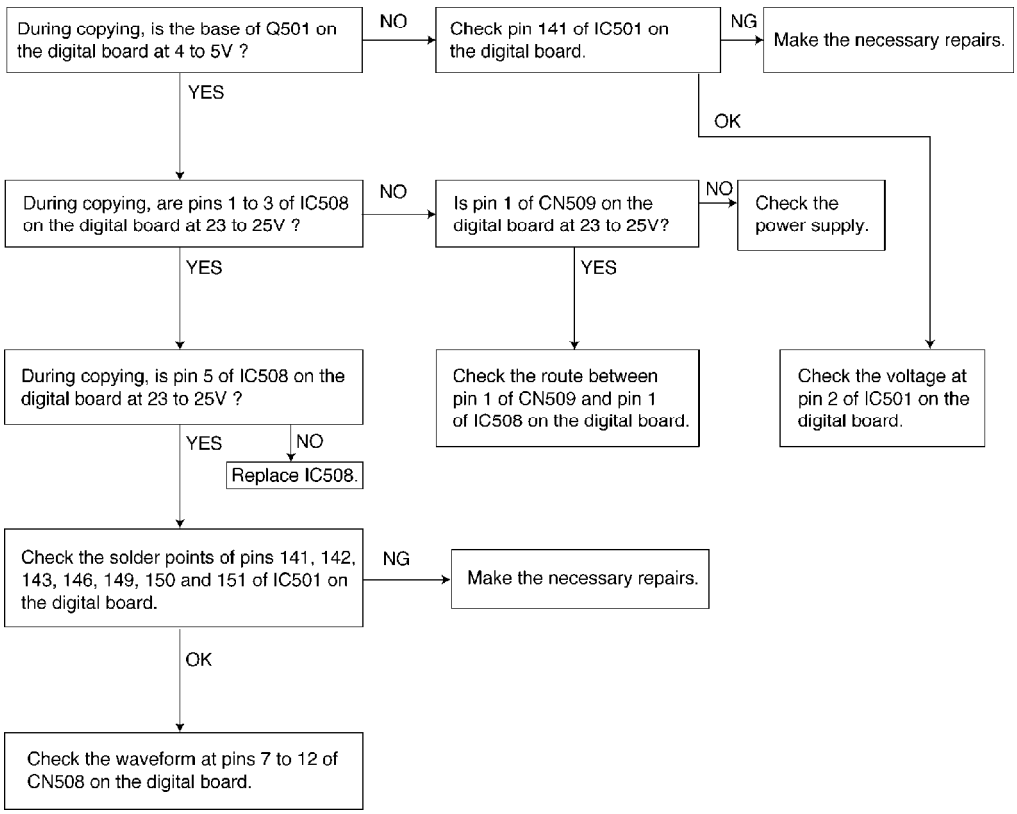

2.4. PROGRAMMING AND LISTS

The programming functions are used to program the various features and functions of the machine, and to test the machine.
This facilitates communication between the user and the service man while programming the unit.

2.4.1. OPERATION

There are 2 basic categories of programming functions, the User Mode and the Service Mode. The Service Mode is further broken down into the normal and special programs. The normal programs are those listed in the Operating Instructions and are available to the user. The special programs are only those listed here and not displayed to the user. In both the User and Service Modes, there are Set Functions and Test Functions. The Set Functions are used to program various features and functions, and the Test Functions are used to test the various functions . The Set Functions are accessed by entering their code, changing the appropriate value, then pressing the SET key. The Test Functions are accessed by entering their code and pressing the key listed on the menu. While programming, to cancel any entry, press the STOP key.

2.4.2. OPERATION FLOW

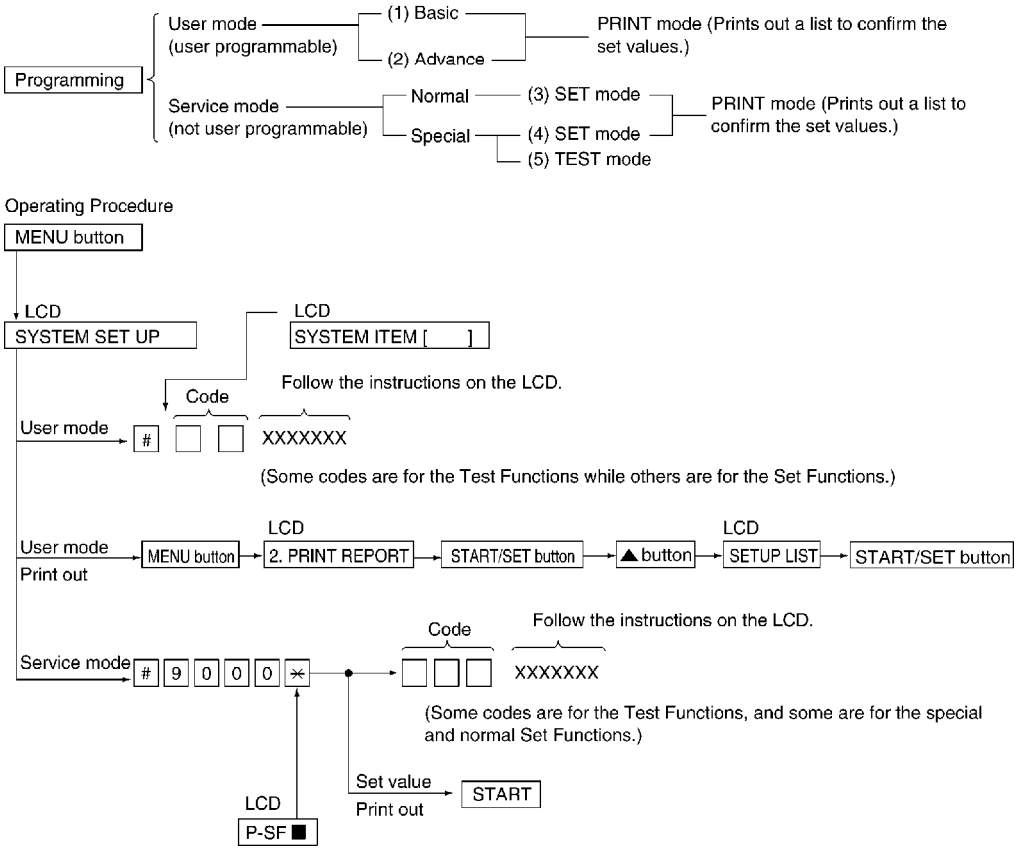

2.4.3. USER MODE (The list below is an example of the SYSTEM SETUP LIST the unit prints out.)

```
SETUP LIST

[ BASIC FEATURE LIST ]

NO.   FEATURE                    CURRENT SETTING
#01   SET DATE & TIME            Jan. 01 1999 12:00AM
#02   YOUR LOGO
#03   YOUR FAX NUMBER
#04   PRINT SENDING REPORT       ERROR      [ERROR,ON,OFF]
#05   FAX RING COUNT             2          [1...5] *5 FOR EXTERNAL TAM
#12   REMOTE TAM ACT.           OFF        [ON,OFF]
                              ID = 11
#13   DIALING MODE               AUTO       [AUTO,TONE,PULSE]
#18   FILM REMAIN
```

Code (#01, #02, #03)

Set Value (AUTO)

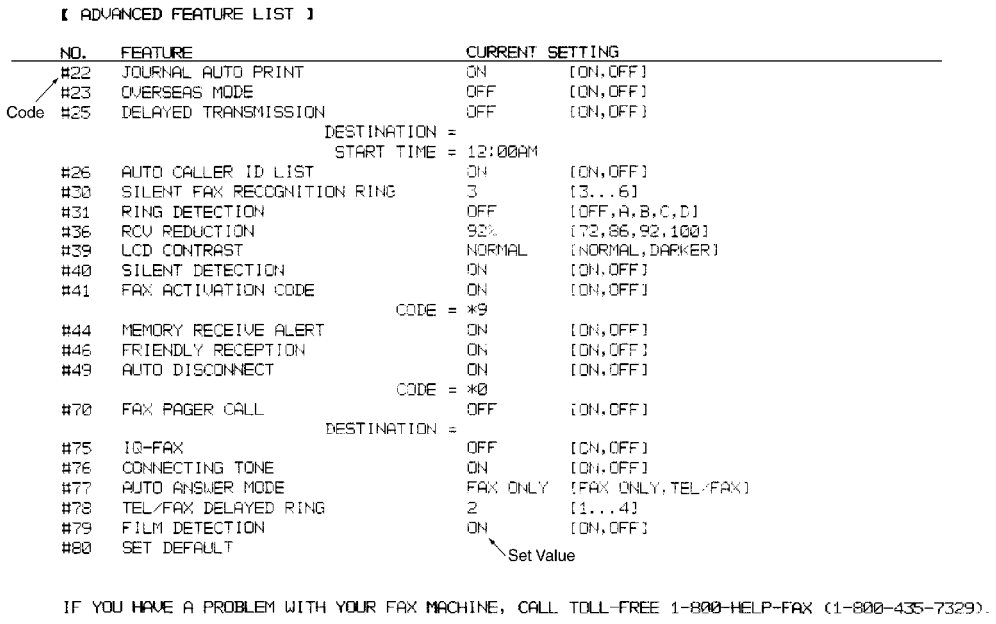

Note:
The above values are the default values.

2.4.4. SERVICE FUNCTION TABLE

Code	Function	Set Value	Effective Range	Default	Remarks
501	Pause time set	X 100 msec	001~600	50	
503	Dial speed select	1:10 pps 2:20 pps	1, 2	1	
511	Vox sense	1:High 2:Low	1, 2	1	When the TAM or TAM does not sto recording the ICM because noise is detected on the telephone line, ch this setting to "LC
520	CED frequency select	1:2100 Hz 2: 1100 Hz	1, 2	1	See Symptom/ / Countermeasure ' for long distance international calls 2.3.3.1. Defective Facsimile Section
521	International mode select	1:ON 2:OFF	1, 2	1	See Symptom/ / Countermeasure ' for long distance international calls 2.3.3.1. Defective Facsimile Section

Code	Function	Set Value	Effective Range	Default	Remarks
522	Auto standby select	1:ON 2:OFF	1, 2	1	The resolution rev to the default whe transmission is complete.
523	Receive equalizer select	1:ON 2:OFF	1, 2	2	When the telepho station is far from unit or reception cannot be perforn correctly, adjust accordingly.
550	Memory clear: To reset the value to the default one, except the top margin (853) and left margin (854).				"START" input"
552	DTMF single tone test	1:ON 2:OFF	1, 2	2	See 2.5. TEST FUNCTIONS.
553	Monitor on FAX communication select	1: OFF 2:PHASE B 3:ALL	1~3	1	Sets whether to monitor the line s with the unit's spe during FAX communication o
554	Modem test				See 2.5. TEST FUNCTIONS.
555	Scan check				See 2.5. TEST FUNCTIONS.
556	Motor test			0	See 2.5. TEST FUNCTIONS.
557	LED test				See 2.5. TEST FUNCTIONS.
558	LCD test				See 2.5. TEST FUNCTIONS.
559	Document jam detection select	1:ON 2:OFF	1, 2	1	See 2.2.1. Paper J
561	KEY test				See 2.5. TEST FUNCTIONS.
570	BREAK % select	1:61% 2:67%	1, 2	1	Sets the % break pulse dialing accordingly PBX.
571	ITS auto redial time set	X number of times	00~99	14	Selects the numb time that ITS is re (not including the dial).
572	ITS auto redial line disconnection time set	X second	001~999	30	Sets the interval redialing.

Code	Function	Set Value	Effective Range	Default	Remarks
573	Remote turn-on ring number set	X number of rings	01~99	15	Sets the number o rings before the u starts to receive a document in the T mode.
590	FAX auto redial time set	X number of times	00~99	5	Selects the numb redial times durin communication (r including the first
591	FAX auto redial time disconnection time set	X second	001~999	45	Sets the FAX redi interval during FA communication.
592	CNG transmit select	1: OFF 2:ALL 3: AUTO	1~3	2	Lets you select th CNG output durin transmission. ALL CNG is output at p A. AUTO: CNG is output only when automatic dialing performed. OFF: C is not output at pl A.
593	Time between CED and 300bps	1: 75 msec 2: 500 msec 3:1 sec	1~3	1	See Symptom/ / Countermeasure for long distance international calls 2.3.3.1. Defective Facsimile Section
594	Overseas DIS detection select	1:detects at the 1st time 2: detects at the 2st time	1, 2	1	See Symptom/ / Countermeasure for long distance international calls 2.3.3.1. Defective Facsimile Section
595	Receive error limit value set	X Number of times	001~999	100	Sets the number o acceptable error l when the FAX reconstructs the received data.
596	Transmit level set	X dBm	- 15~00	10	Selects the FAX transmission leve
598	Receiving sensitivity	43= -43 dBm	20~48	43	See (countermeas C).
602	Warning LIST Printing	1:ON 2:OFF	1, 2	1	Used to print a ca list when setting t TEL/FAX mode an detection.

Code	Function	Set Value	Effective Range	Default	Remarks
700	EXT. TAM OGM Rec. time	X second	01~99		Set the start time silent detection.
701	No voice detect time	X 100 msec	01~99		Sets the silent cal confirmation dete time.
717	Transmit speed selection	1:9600BS 2: 7200BS 3: 4800BS 4: 2400BS	1~4	1	Adjusts the speec start training duri FAX transmission
718	Receive speed selection	1:9600BS 2: 7200BS 3: 4800BS 4: 2400BS	1~4	1	Adjusts the speec start training duri FAX reception.
719	Ringer off in TEL/FAX mode	1:ON 2:OFF	1, 2	1	Sets the ringer sw off when a call is received in the TE FAX mode.
721	Pause tone detect	1:ON 2:OFF	1, 2	1	Selects the tone detection for paus dialing.
722	Redial tone detect	1:ON 2:OFF	1, 2	1	Selects the tone detection mode at redialing.
745	Poewr ON film feed	1:ON 2:OFF	1, 2	1	When the power i turned on, the filn wound to take up slack.
763	CNG detect time for friendly reception	1:10 sec 2:20 sec 3:30 sec	1~3	3	Selects the CNG detection time of friendly reception
771	T1 timer	1:35 sec 2:60 sec	1, 2	1	Sets a higher valu when the respons from the other pa needs more time during FAX transmission.
815	Sensor & Vox check				See 2.5. TEST FUNCTIONS.
852	Print test pattern				See 2.5. TEST FUNCTIONS.
853	Top margin		1~9	--------	
854	Left margin		1~8	--------	
861	A4 size set	1:ON 2:OFF	1, 2	2	Used only at the factory.
880	History list				See 2.4.6. HISTOR

Code	Function	Set Value	Effective Range	Default	Remarks
890	TEL/FAX 1st ring back tone	1:ON 2:OFF	1, 2	1	Selects whether t TEL/FAX 1st ring tone is ON or OFF the TEL/FAX mod

2.4.5. SERVICE MODE SETTINGS (Example of a printed out list)

```
[ SERVICE DATA LIST ]
  Code                                  Set Value
501 PAUSE TIME              =  050*100ms        [001...600]*100ms
503 DIAL SPEED              =  10pps            [1=10     2=20]pps
520 CED FREQ.               =  2100Hz           [1=2100   2=1100]Hz
521 INTL. MODE              =  ON               [1=ON     2=OFF]
522 AUTO STANDBY            =  ON               [1=ON     2=OFF]
523 RX EQL.                 =  OFF              [1=ON     2=OFF]
700 EXT.TAM OGM REC. TIME   =  10sec            [01...99]sec
701 NO VOICE DETECT TIME    =  50*100msec       [01...99]*100msec
853 TOP MARGIN              =  5                [1...9]
854 LEFT MARGIN             =  5                [1...8]

[ SPECIAL SERVICE SETTINGS ]

511   552   553   559   570   571   572   573   590   591   592   593   594
  1     2     1     1     1    14   030    15    05   045     2     1     1
Code  Set Value
595   596   598   602   717   718   719   721   722   745   763   771   861
100    10    43     1     1     1     1     1     1     1     3     1     2

890
  1
```

Note:
The above values are the default values.

2.4.6. HISTORY

Note:
See the following descriptions of this report. Item No. (1) ~ (49) are corresponding to the listed items in 2.4.6.1. Descriptions of the HISTORY Report.

2.4.6.1. Descriptions of the HISTORY Report

(1) ROM VERSION
EPROM version
(2) SUM
EPROM internal data calculation.
(3) YOUR LOGO
The user logo recorded in the unit. If it is not recorded, NONE will be displayed.
(4) YOUR TELEPHONE NUMBER
The user telephone number recorded in the unit. If it is not recorded, NONE will be displayed.
(5) FAX PAGER NUMBER
If you program a pager number into the unit, the pager number will be displayed here.
(6) FACTORY - CUSTOMER

This shows how many days from factory production until the user turns ON the unit.
(7) MONTH
The shows the very first month, date, year and time set by the user after they purchased the unit.
(8) DAY
The shows the very first month, date, year and time set by the user after they purchased the unit.
(9) YEAR
The shows the very first month, date, year and time set by the user after they purchased the unit.
(10) TIME
The shows the very first month, date, year and time set by the user after they purchased the unit.
(11) USAGE TIME
The amount of time the unit has been powered ON.
(12) FACTORY - NOW
This shows how many days from factory production until the user prints out this history list.
(13) TEL MODE
The amount of time the TEL mode setting was used.
(14) FAX MODE
The amount of time the FAX mode setting was used.
(15) TEL/FAX MODE
The amount of time the TEL/FAX mode setting was used.
(16) ANS/FAX MODE
The amount of time the ANS/FAX mode setting was used.
(17) FINAL RECEIVE MODE
The last set receiving mode by the user.
(18) TONE/PULSE SELECTION
The most recently used setting used, either TONE or PULSE.
(19) RECEIVE REDUCTION
The compression rate when receiving.
(20) SETTING NO. OF DIRECTORY
The recorded directory stations (one touch and JOG DIAL).
(21) NUMBER OF COPY
The number of pages copied.
(22) NUMBER OF RECEIVE
The number of pages received.
(23) NUMBER OF SENDING
The number of pages sent.
(24) NUMBER OF CALLER ID
The number of times Caller ID was received.
(25) NUMBER OF RECORDING MESSAGE
The number of messages recorded in TAM.
(26) NUMBER OF PC SCAN
The number of times multifunction was used for the Scanner. (The number of pages scanned. If the unit does not have a PC interface, NONE will be printed.)
(27) NUMBER OF PC-PRINT
The number of times multifunction was used for the Printer. (The number of pages printed. If the unit does not have a PC interface, NONE will be printed.)
(28) NUMBER OF RECEIVING TO PC
The number of times received in the PC through the FAX serial interface (RS232C). (The number of pages received. If the unit does not have a PC interface, NONE will be printed.)
(29) NUMBER OF SENDING FROM PC
The number of times transmitted from the PC through the FAX serial interface (RS232C). (The

number of pages transmitted. If the unit does not have a PC interface, NONE will be printed.)
(30) NUMBER OF PRINTING WARNING LIST
The number of warning lists printed until now.
(31) NUMBER OF PRINTING HELP
The number of help lists printed until now.
(32) NUMBER OF DIVIDED PRINTING IN FAX RECEPTION
The number of faxes received that were divided into more than one sheet since the unit was purchased.
(33) DETECTION OF RS232C
When the fax and PC serial cable (RS232C) are connected and the signal is received correctly, COMPLETE will be printed. For models without a PC interface or when there is a PC interface but the signal cannot be received between the fax and PC, INCOMPLETE will be printed. (The number of pages transmitted. If the unit does not have a PC interface, NONE will be printed.)
(34) NO. OF IQ-FAX LOADING -OK:
(35) NO. OF IQ-FAX LOADING -NG:
You may not be able to use IQ-FAX if the special subscriber information is not loaded from the IQ-FAX center before use. Depending on the conditions of the communication line, it may not be completed in one time, so RETRIED will be performed. The number of OK and NG IQ-FAX loadings will be printed.
(36) FAX MODE
Means the unit received a fax message in the FAX mode.
(37) MAN RCV
Means the unit received a fax message by manual operation.
(38) FRN RCV
Means the unit received a fax message by friendly signal detection.
(39) VOX
Means the unit detected silence or no voice.
(40) RMT DTMF
Means the unit detected DTMF (Remote Fax activation code) entered remotely.
(41) PAL DTMF
Means the unit detected DTMF (Remote Fax activation code) entered by a parallel connected telephone.
(42) TURN-ON
Means the unit started to receive after 15 rings. (Remote Turn On: Service Code #573)
(43) TIME OUT
Means the unit started to receive after Ring Time Out in the EXT-TAM or TEL/FAX mode.
(44) IDENT
Means the unit detected Ring Detection.
(45) CNG OGM
Means the unit detected the CNG while it was sending the Dummy Ring Back Tone in the TEL/FAX mode, or while answering a call in the EXT-TAM mode. Or means the unit detected the CNG while it was sending the OGM in the ANS/FAX mode.
(46) CNG ICM
Means the unit detected the CNG while it was recording the ICM in the ANS/FAX mode.
(47) KEY OPERATION -1st 50:
(48) KEY OPERATION -Last 50:
Indicates 2-digit codes. Refer to 2.5.2. BUTTON CODE TABLE.

- 1st 50:

History of the first 50 key operations after purchase.

(Ex.) If the MENU, # and 9 buttons are pressed, 20, 3C and 39 will be printed.

- Last 50:

History of the last 50 key operations.

(49) NUMBER OF IQ-FAX PAGES TRANSMITTED

2.4.7. SPECIAL SERVICE JOURNAL REPORTS

Journal 2 and Journal 3 shown below, which are special journals giving the additional detailed information about the latest 35 communications, can be printed by Service Code 881 or 882. Remote printing function for the journal reports (JOURNAL, JOURNAL 2 and JOURNAL 3) is also available for service technicians. (Refer to 2.3.3.3.2. Remote programming.) The JOURNAL report only gives you basic information about a communication, but the other two journal reports provide different information on the same item (communication).

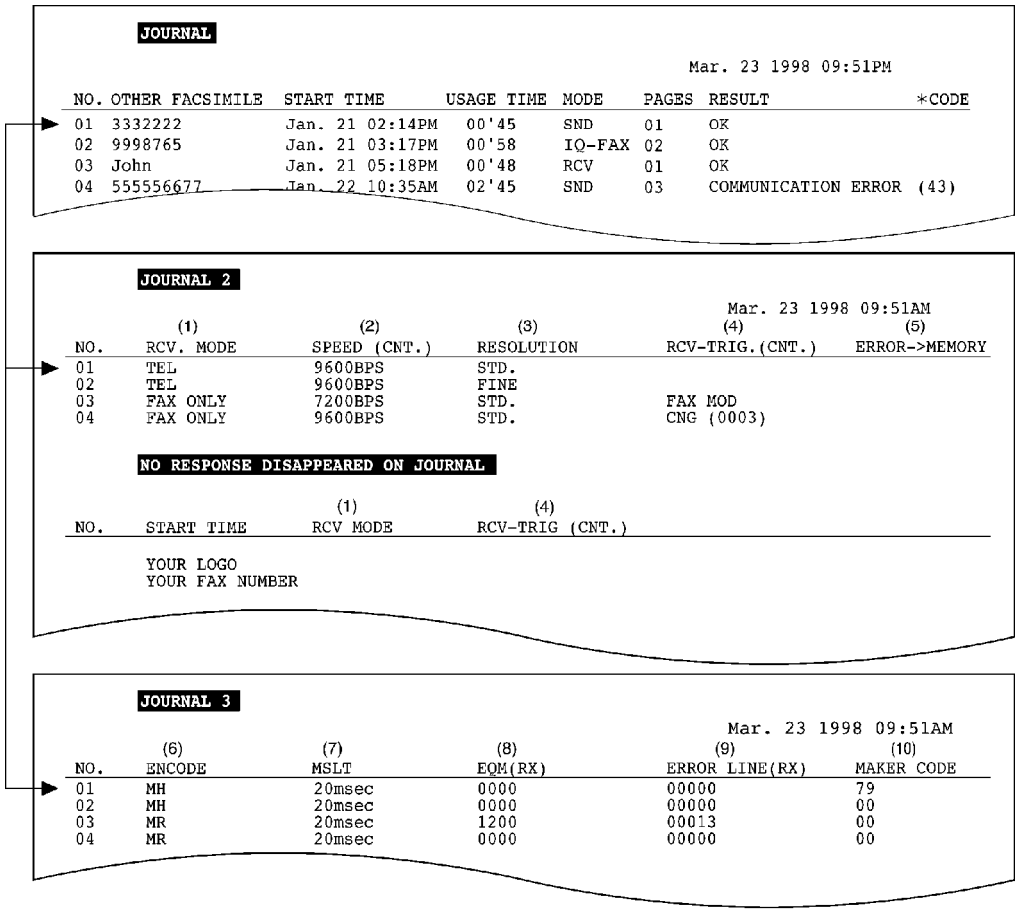

JOURNAL

Mar. 23 1998 09:51PM

NO.	OTHER FACSIMILE	START TIME	USAGE TIME	MODE	PAGES	RESULT	*CODE
01	3332222	Jan. 21 02:14PM	00'45	SND	01	OK	
02	9998765	Jan. 21 03:17PM	00'58	IQ-FAX	02	OK	
03	John	Jan. 21 05:18PM	00'48	RCV	01	OK	
04	555556677	Jan. 22 10:35AM	02'45	SND	03	COMMUNICATION ERROR	(43)

JOURNAL 2

Mar. 23 1998 09:51AM

NO.	(1) RCV. MODE	(2) SPEED (CNT.)	(3) RESOLUTION	(4) RCV-TRIG.(CNT.)	(5) ERROR->MEMORY
01	TEL	9600BPS	STD.		
02	TEL	9600BPS	FINE		
03	FAX ONLY	7200BPS	STD.	FAX MOD	
04	FAX ONLY	9600BPS	STD.	CNG (0003)	

NO RESPONSE DISAPPEARED ON JOURNAL

NO.	START TIME	(1) RCV MODE	(4) RCV-TRIG (CNT.)

YOUR LOGO
YOUR FAX NUMBER

JOURNAL 3

Mar. 23 1998 09:51AM

NO.	(6) ENCODE	(7) MSLT	(8) EQM(RX)	(9) ERROR LINE(RX)	(10) MAKER CODE
01	MH	20msec	0000	00000	79
02	MH	20msec	0000	00000	00
03	MR	20msec	1200	00013	00
04	MR	20msec	0000	00000	00

HOW TO READ JOURNAL REPORTS:

Example:

1. Look at NO. 01 in the JOURNAL. If you want to know about the details about that item, see NO. 01 in the JOURNAL 2 and the JOURNAL 3. You can get the following information.
*** MODE: Fax transmission / * RCV. MODE: TEL / * TX SPEED: 9.6 kbps / * RESOLUTION: standard / * ENCODE: MH / * MAKER CODE:**

79

2. Look at NO. 04 in the JOURNAL 2. CNG (0003) indicates that the CNG signal has been received three times since the purchase date.

For further details, see 2.4.7.1. JOURNAL 2 and 2.4.7.2. JOURNAL 3.

2.4.7.1. JOURNAL 2 (Refer to JOURNAL 2 in 2.4.7.3. PRINTOUT EXAMPLE.)

Journal 2 displays the additional detailed information about the last 35 communications.

Descriptions:

(1) RCV. MODE

Indicates which receive mode the unit was in when the unit received a fax message.
This information is also displayed when the unit transmitted a fax message.

(2) SPEED

Indicates the speed of the communication. If multiple pages are transmitted or received, it indicates the last page~s communication speed. If there is a communication error, "?" is displayed.

(3) RESOLUTION

Indicates the resolution of the communication. If multiple pages are transmitted or received, it indicates the last page's resolution. If there is a communication error, "?" is displayed.

(4) RCV-TRIG. (CNT.)

Indicates the trigger that causes the unit to switch to the fax receive mode. The available options are listed in JOURNAL 2 in 2.4.7.3. PRINTOUT EXAMPLE. The values in parentheses indicate how many times the trigger has been used. (For example, "0003" means three times.)

No.	Display	Function
1	FAX MODE	Means the unit received a fax message in the FAX mode.
2	MAN RCV	Means the unit received a fax message by manual operation.
3	FRN RCV	Means the unit received a fax message by friendly signal detection.
4	VOX	Means the unit detected silence or no voice.
5	RMT DTMF	Means the unit detected DTMF (Remote Fax activation code) entered remotely.
6	PAL DTMF	Means the unit detected DTMF (Remote Fax activation code) entered by a parallel connected telephone.
7	TURN-ON	Means the unit started to receive after 15 rings. (Remote Turn On: Service Code #573)
8	TIME OUT	Means the unit started to receive after Ring Time Out in the EXT-TAM or TEL /FAX mode.
9	IDENT	Means the unit detected Ring Detection.
10	CNG OGM	Means the unit detected the CNG while it was sending the Dummy Ring Back Tone in the TEL/FAX mode. / OR / Means the unit detected the CNG while it was sending the OGM in the ANS/FAX mode.
11	CNG ICM	Means the unit detected the CNG while it was recording the ICM in the ANS/ FAX mode.

(5) ERROR → MEMORY

Indicates the reason why the unit received a fax message in memory.
If you look at No.11 in the JOURNAL 2 in 2.4.7.3. PRINTOUT EXAMPLE, it shows the fax message was received in memory due to "PAPER OUT" error.
[NO RESPONSE DISAPPEARED ON JOURNAL]

The "NO RESPONSE DISAPPEARED ON JOURNAL" displays the information about the last 10 communications terminated by "No Response". (Some of the communications terminated by "No Response" were not displayed in the JOURNAL.)
When a fax transmission cannot be performed because the ohter party's unit is set to the TEL mode, "No response" will be printed.

2.4.7.2. JOURNAL 3 (Refer to JOURNAL 3 in 2.4.7.3. PRINTOUT EXAMPLE.)

Descriptions:
(6) ENCODE
Compression Code : MH/MR
(7) MSLT
MSLT means Minimum Scan Line Time. Used only at the factory.
(8) EQM
EQM means Eye Quality Monitor. Used only at the factory.
(9) ERROR LINE(RX)
When an error occurs while receiving a fax, this shows the number of error lines.
(10) MAKER CODE
This shows a 2 digit code of the other party's fax machine brand.
0E: "KX" model
00: Unknown
79: "UF" model
19: "Zerox" model

2.4.7.3. PRINTOUT EXAMPLE

JOURNAL2

Mar. 25 1998 01:59PM

NO.	RCV. MODE	SPEED (CNT.)	RESOLUTION	RCV-TRIG. (CNT.)	ERROR->MEMORY
01	FAX ONLY	9600BPS	FINE.	FAX MOD	
02	FAX ONLY	9600BPS	STD.	FAX MOD	
03	FAX ONLY	9600BPS	FINE.		
04	FAX ONLY	9600BPS	FINE.	FAX MOD	
05	FAX ONLY	9600BPS	FINE.	FAX MOD	
06	FAX ONLY	9600BPS	FINE.	FAX MOD	
07	FAX ONLY	9600BPS	FINE.		
08	FAX ONLY	9600BPS	FINE.		
09	FAX ONLY	9600BPS	FINE.		
10	FAX ONLY	9600BPS	STD.	FAX MOD	
11	FAX ONLY	9600BPS	FINE.	FAX MOD	PAPER OUT
12	FAX ONLY	9600BPS	STD.	FAX MOD	
13	FAX ONLY	9600BPS	STD.		
14	FAX ONLY	?	?		
15	FAX ONLY	?	?		
16	FAX ONLY	?	?		
17	FAX ONLY	9600BPS	STD.		
18	FAX ONLY	9600BPS	FINE.	FAX MOD	
19	FAX ONLY	9600BPS	STD.	FAX MOD	
20	FAX ONLY	9600BPS	S-FINE.		
21	FAX ONLY	9600BPS	FINE.		
22	FAX ONLY	9600BPS	FINE.	FAX MOD	
23	FAX ONLY	?	?	FAX MOD	
24	FAX ONLY	9600BPS	STD.	FAX MOD	
25	FAX ONLY	9600BPS	STD.	FAX MOD	
26	FAX ONLY	9600BPS	FINE.	FAX MOD	
27	FAX ONLY	9600BPS	FINE.		
28	FAX ONLY	9600BPS	STD.	FAX MOD	
29	FAX ONLY	9600BPS	FINE.	FAX MOD	
30	FAX ONLY	9600BPS	S-FINE.	FAX MOD	
31	FAX ONLY	9600BPS	STD.	FAX MOD	
32	FAX ONLY	9600BPS	STD.	FAX MOD	
33	FAX ONLY	?	?	FAX MOD	
34	FAX ONLY	9600BPS	STD.	FAX MOD	
35	FAX ONLY	9600BPS	STD.	FAX MOD	

NO RESPONSE DISAPPEARED ON JOURNAL

NO.	START TIME	RCV MODE	RCV-TRIG. (CNT.)

JOURNAL 3

Mar. 25 1998 01:58PM

NO.	ENCODE	MSLT	EOM(RX)	ERROR LINE(RX)	MAKER CODE
01	MR	10msec	007A	00000	0E
02	MR	20msec	016B	00000	00
03	MH	10msec	0000	00000	00
04	MR	20msec	019B	00003	00
05	MR	20msec	0156	00011	00
06	MR	20msec	0113	00000	00
07	MR	5msec	0000	00000	79
08	MR	5msec	0000	00000	79
09	MR	0msec	0000	00000	19
10	MR	20msec	0100	00000	00
11	MR	10msec	0073	00000	0E
12	MR	20msec	012B	00000	00
13	MH	20msec	0000	00000	79
14	MH	20msec	0000	00000	00
15	MH	20msec	0000	00000	00
16	MH	20msec	0000	00000	00
17	MR	5msec	0000	00000	79
18	MR	10msec	00AB	00004	0E
19	MR	20msec	0124	00000	00
20	MR	20msec	0000	00000	00
21	MR	20msec	0000	00000	00
22	MR	20msec	0135	00000	00
23	MR	20msec	0000	00000	00
24	MR	20msec	01BC	00000	00
25	MR	20msec	01AC	00000	00
26	MR	20msec	020F	00000	00
27	MR	10msec	0000	00000	0E
28	MR	20msec	01DF	00000	00
29	MR	20msec	01EA	00000	00
30	MR	20msec	00CD	00000	00
31	MR	20msec	02F8	00000	0E
32	MR	10msec	04F8	00000	0E
33	MR	10msec	0000	00000	00
34	MR	20msec	03B6	00000	0E
35	MH	20msec	00E0	00000	00

2.5. TEST FUNCTIONS

The codes listed below can be used to perform simple checks of some of the unit's functions. When complaints are received from customers, they provide an effective tool for identifying the locations and causes of malfunctions.

Test mode	Type of Mode	Code □□□ Operation after code input	Function
MOTOR TEST	Service Mode	5 5 6 START	Rotates the transmission and reception motor to check the operation of the motor. 13 ... FAX TX/Reading memory 14 ... Document feed 23 ... Recording paper is fed 33 ... List/FAX RX print, pull back recording paper 43 ... Copy 05 ... Recording paper feed (Test a recording paper feeding operation by shifting from 23 to 33.) • Press the STOP button to quit.
MODEM TEST	Service Mode	5 5 4 START	First, go to the OFF-HOOK status with the handset to enter this Test Mode. Each time you press the start key, each of the signals will be heard in the following order from the handset. 1) OFF 2) 9600bps 3) 7200bps 4) 4800bps 5) 2400bps 6) 300bps 7) 2100Hz 8) 1100Hz
ROM CHECK	Service Mode	5 5 1 START	Indicates the version and check sum of the ROM.
SCAN CHECK	Service Mode	5 5 5 START	Turns on the LEDs of the CIS and operates the read system.
LCD CHECK	Service Mode	5 5 8 START	Checks the LCD indication. Illuminates all the dots to check if they are normal.
DTMF SINGLE TEST	Service Mode	5 5 2 1..On 2..Off	Outputs DTMF as single tones. Used to check the frequencies of the individual DTMF tones. Refer to **2.5.1. DTMF Single Tone Transmit Select**.
LED TEST	Service Mode	5 5 7 START	All LEDs above the operation panel board flash on and off, or are illuminated.
KEY CHECK	Service Mode	5 6 1 START { any key }	Checks the button operation. Indicates the button code on the LCD while the button is pressed. Refer to **2.5.2. Button Code Table**.
FACTORY SET	Service Mode	5 5 0 START	Clears the memory where the user can store data.
PRINT TEST PATTERN	Service Mode	8 5 2 START	Prints out the test pattern. Used mainly at the factory to test the print quality. You can select 1~4. (See **2.5.3. PRINT TEST PATTERN**.)

Test mode	Type of Mode	Code □□□ Operation after code input	Function
SENSOR CHECK & VOX CHECK	Service Mode	8 1 5 START LCD display Do Sn Co Pt Ri Vx	If you enter this mode and operate sensor levers with your hands, the LCD display of the related sensor (or switch) turns ON/OFF. Also, when copying a document, the related sensor will turn ON/OFF. (Do, Sn, Pl, Pt, Ri) For each sensor's operation, refer to **6.5. SENSORS AND SWITCHES**. Do: Document set sensor: Paper inserted. Turns on when a document is inserted. Sn: Read position sensor: At the read position. Turns on when the front cover is opened and the sensor lever is pressed directly. Co: Cover open sensor: Cover open. Turns on and off when the front cover is opened and closed. Pt: Paper top sensor: Sensor on. Turns on when the front cover is opened and the sensor lever is pressed directly. Ri: Film and sensor: Sensor on. Turns on and off when the film end sensor gear turns around. Vx: Vox signal: Detection signal for the tone on the line. Turns on when there is a tone signal on the line.

Note: The numbers in the boxes (XXX) indicate the keys to be input for the various test modes.

2.5.1. DTMF SINGLE TONE TRANSMIT SELECTION

When set to ON (=1), the 12 keys and transmission frequencies are as shown.

key	High Frequency (Hz)	Key	Low Frequency (Hz)
"1"	697	"5"	1209
"2"	770	"6"	1336
"3"	852	"7"	1477
"4"	941	"8"	1633

When set to OFF (=2), the 12 keys and transmission frequencies are as shown.

High (Hz) / Low (Hz)	1209	1336	1477
697	"1"	"2"	"3"
770	"4"	"5"	"6"
852	"7"	"8"	"9"
941	*	"0"	"#"

Note: After performing this check, do not forget to turn the setting off. Otherwise, dialing in DTMF signal will not work.

2.5.2. BUTTON CODE TABLE

Code	Button Name	Code	Button Name	Code	Button Name
02	RESOLUTION	31	1	3D	REDIAL/PAUSE
04	START/COPY/SET	32	2	47	CALLER ID SEARCH
05	LOWER	33	3	48	IQ-FAX
08	MONITOR	34	4	49	QUICK SCAN
0A	MUTE	35	5	64	STATION 1
0C	RECEIVE MODE	36	6	65	STATION 2
20	MENU	37	7	66	STATION 3
22	HELP	38	8	1E	JOG (RIGHT)
24	DIRECTORY	39	9	1F	JOG (LEFT)
25	▲ VOLUME	3A	0		
26	▼ VOLUME	3B	*	00	NO INPUT
		3C	#	01	STOP

Note:
These codes (00, 01) are only for the data in the History Report.

2.5.3. PRINT TEST PATTERN

1. Platen roller

(Reference pattern)

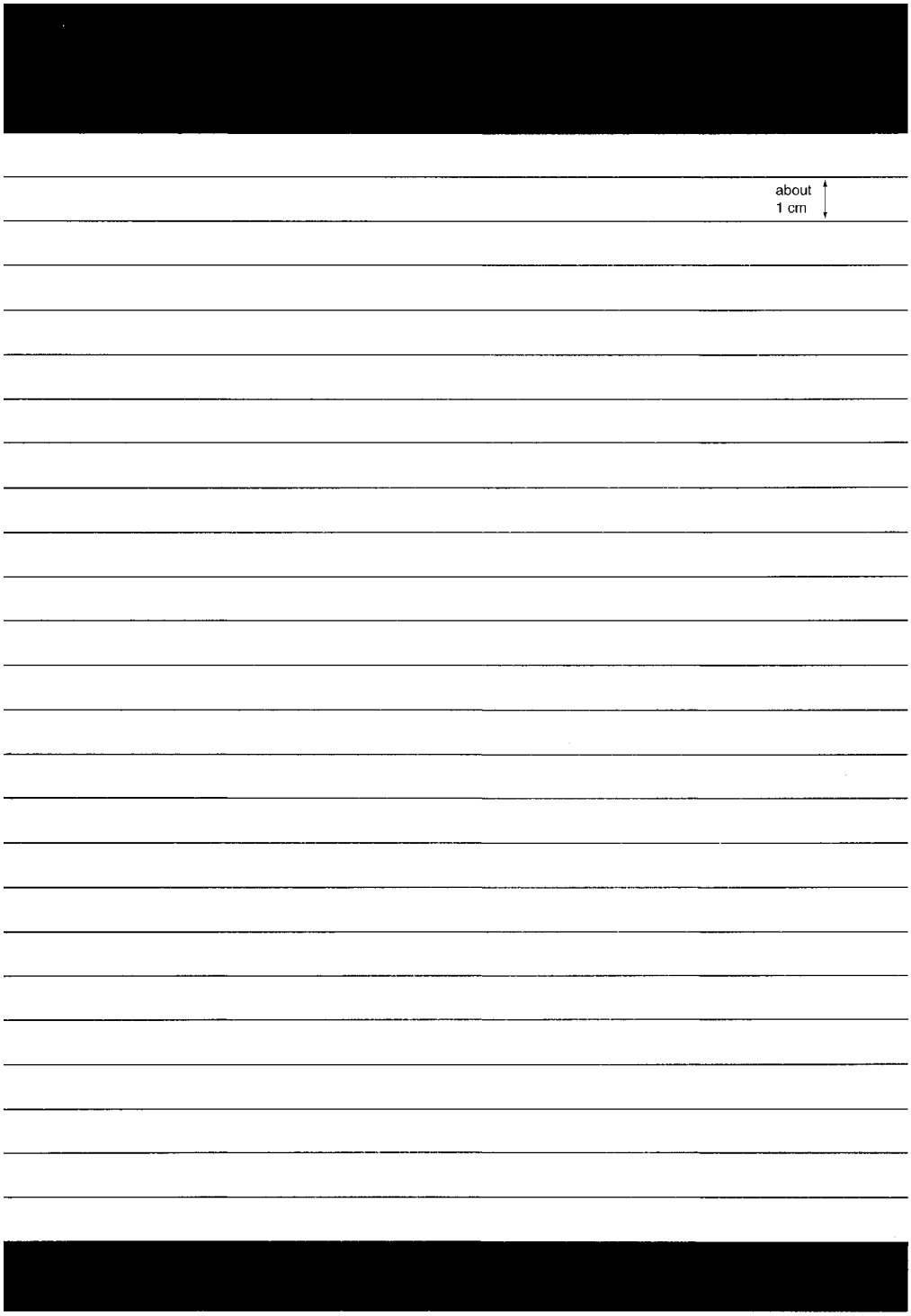

2. Left margin/Top margin

(Reference pattern)

3. Thermal head 1 dot

(Reference pattern)

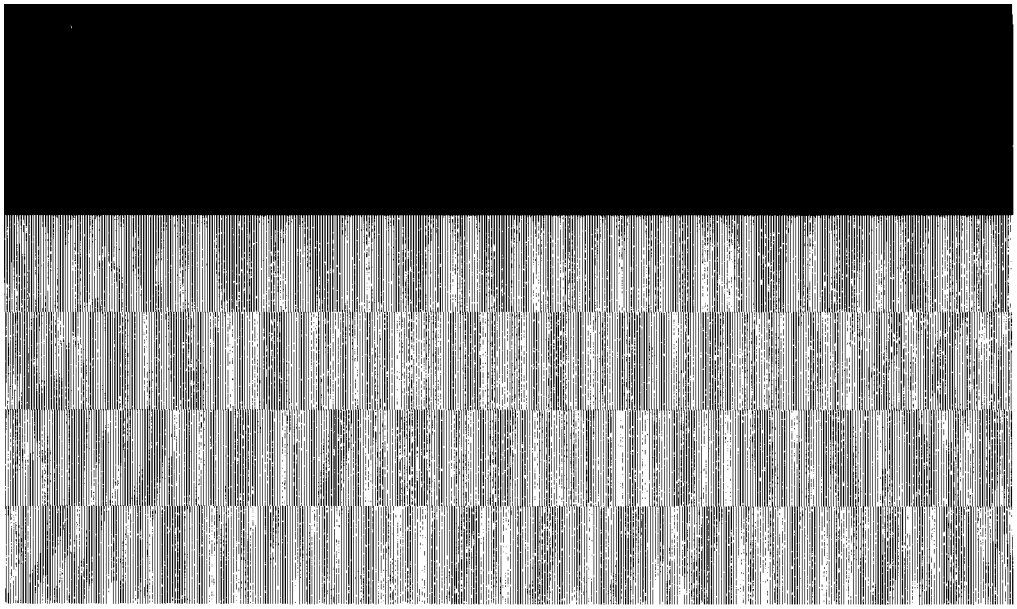

4. Use this test pattern to confirm the torque limiter for Ink film and platen roller timing.

(Reference pattern)

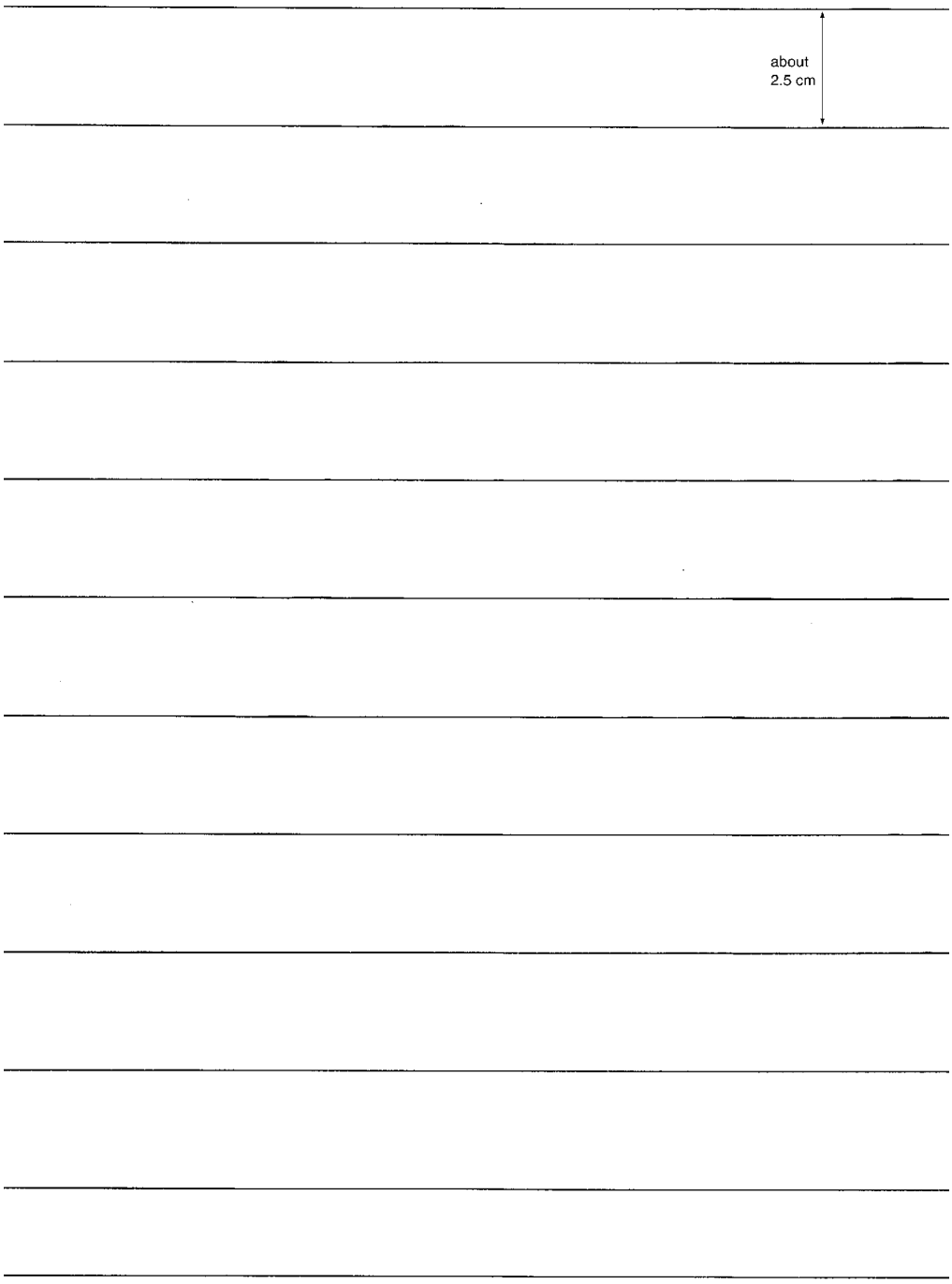

3. ADJUSTMENTS

3.1. TABLE OF TEST EQUIPMENT AND TOOLS

No.	Test Equipment and Jig Name	Jig No.
1	Oscilloscope	--------
2	Extension Cord	PQZZ2K12Z, PQZZ8K18Z

3.2. ADJUSTING THE FEEDER PRESSURE

If misfeeding of a document such as multiple feeding or no feeding occurs frequently, try to adjust the feeder pressure by following the steps below.

1. Slide the cover open lever forwards to open the front cover.
2. Shift the position of the lever by using an instrument with a pointed end like a clip or a ball-point pen.
   Position A: Select this position when documents are not fed.
   Position B: Standard position (pre-selected)
   Position C: Select this position when documents are multiple-fed.
3. Close the front cover securely by pushing down on both ends.

3.3. CONFIRMING THE SEPARATION SPRING

1. Open the front cover.
2. Check the highest level of the separation spring with the spring height tool. Please make sure that the separation spring does not touch the tool during this operation. (Both right and left) (See Fig. 1.)

Note:
Be careful not to bend the separation spring.

Fig. 1

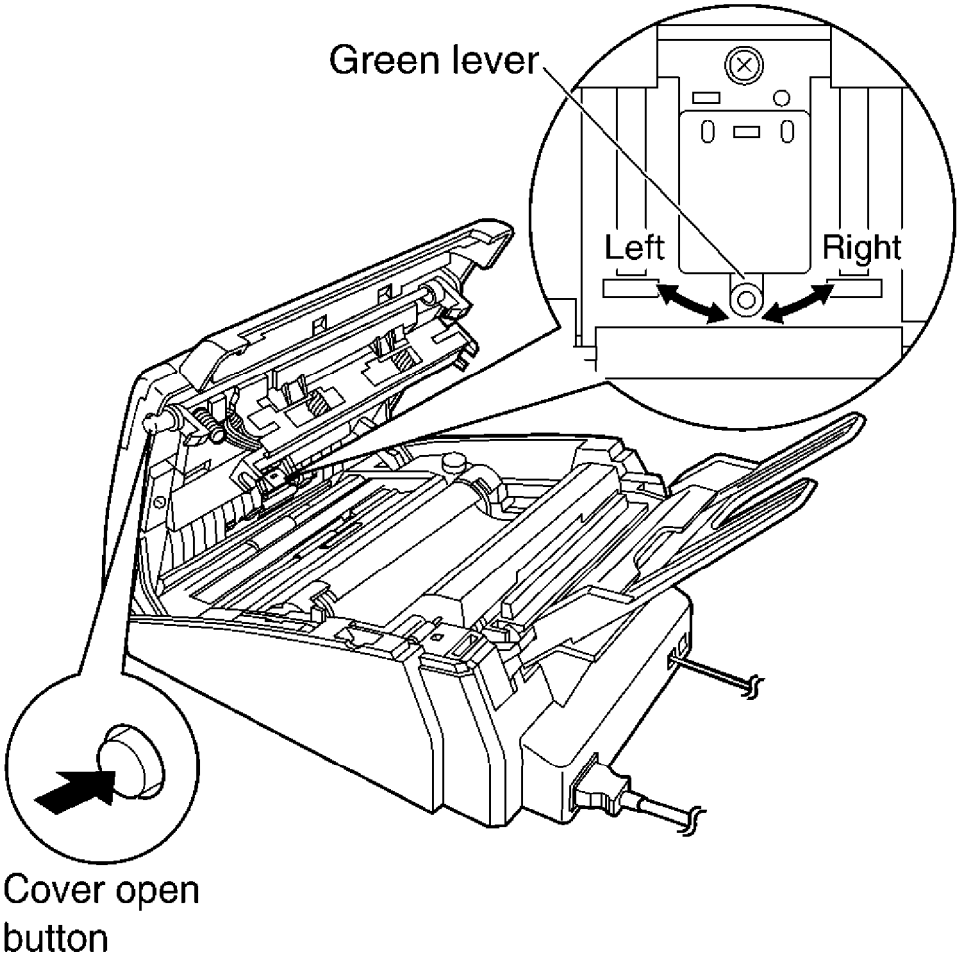

3.4. DOCUMENT READ START POSITION ADJUSTMENT

1. **Connect the AC cord.**
2. **Copy the document and confirm the read start position of the document. Compare the printout (copy) with the original document.**
3. **If out of position, adjust the read position.**
4. **Press the MENU button.**
5. **Press the #, 9, 0, 0, 0, and 5, 6, 3 buttons.**
6. **Press the ■ , ■ , SET and MENU buttons.**

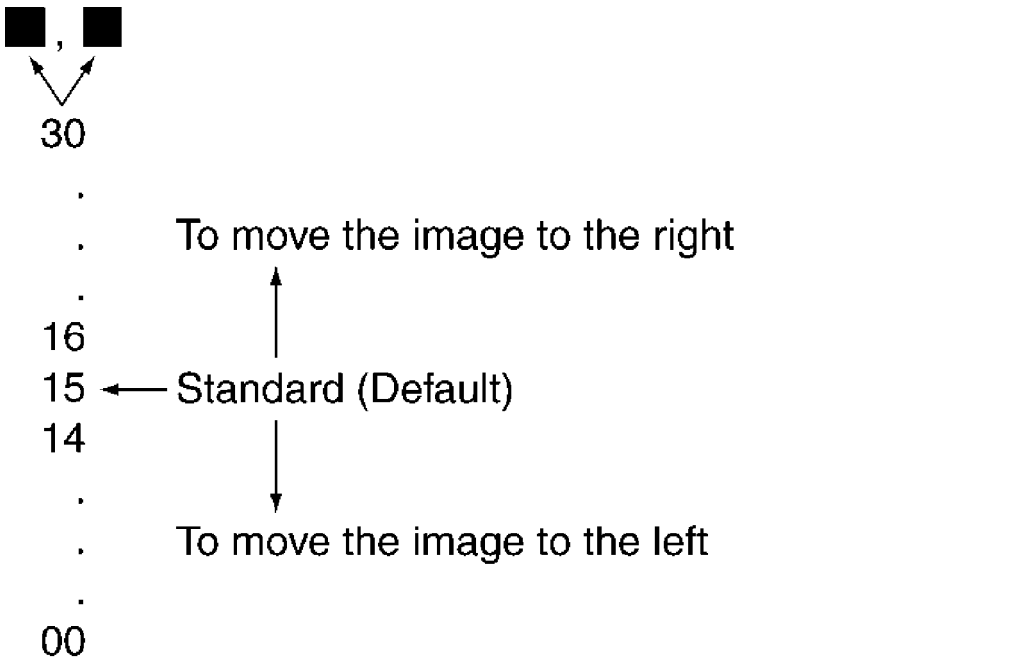

The read start position moves 1 mm in an increment.

4. DISASSEMBLY INSTRUCTIONS

5. HOW TO REPLACE THE FLAT PACKAGE IC

Even if you do not have the special tools (for example, a spot heater) to remove the Flat IC, with some solder (large amount), a soldering iron and a cutter knife, you can easily remove the ICs that have more than 100 pins.

5.1. PREPARATION

- SOLDER

Sparkle Solder 115A-1, 115B-1 OR Almit Solder KR-19, KR-19RMA

- Soldering iron

Recommended power consumption is between 30 W to 40 W. / Temperature of Copper Rod 662 ± 50°F (350 ± 10°C) / (An expert may handle a 60~80 W iron, but a beginner might damage the foil by overheating.)

- Flux / HI115 Specific gravity 0.863 / (Original flux should be replaced daily.)

5.2. FLAT PACKAGE IC REMOVAL PROCEDURE

1. Put plenty of solder on the IC pins so that the pins can be completely covered.

Note:
If the IC pins are not soldered enough, you may give pressure to the P.C. board when cutting the pins with a cutter.

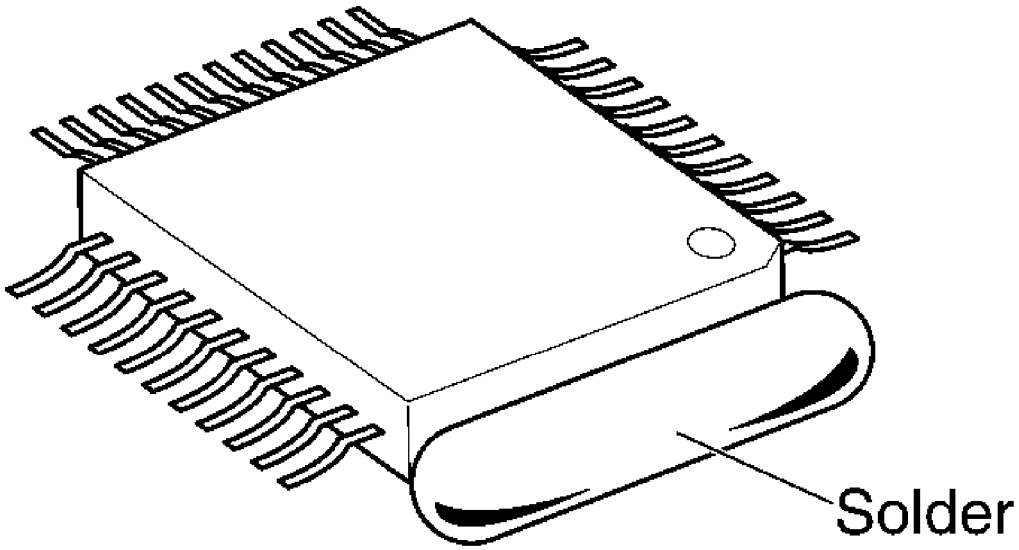

2. Make a few cuts into the joint (between the IC and its pins) first and then cut off the pins thoroughly.

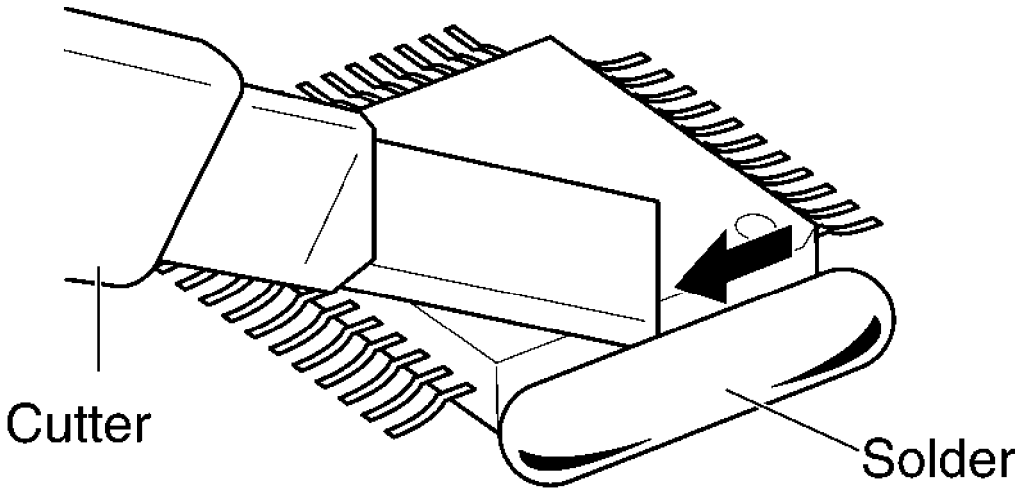

3. While the solder melts, remove it together with the IC pins.

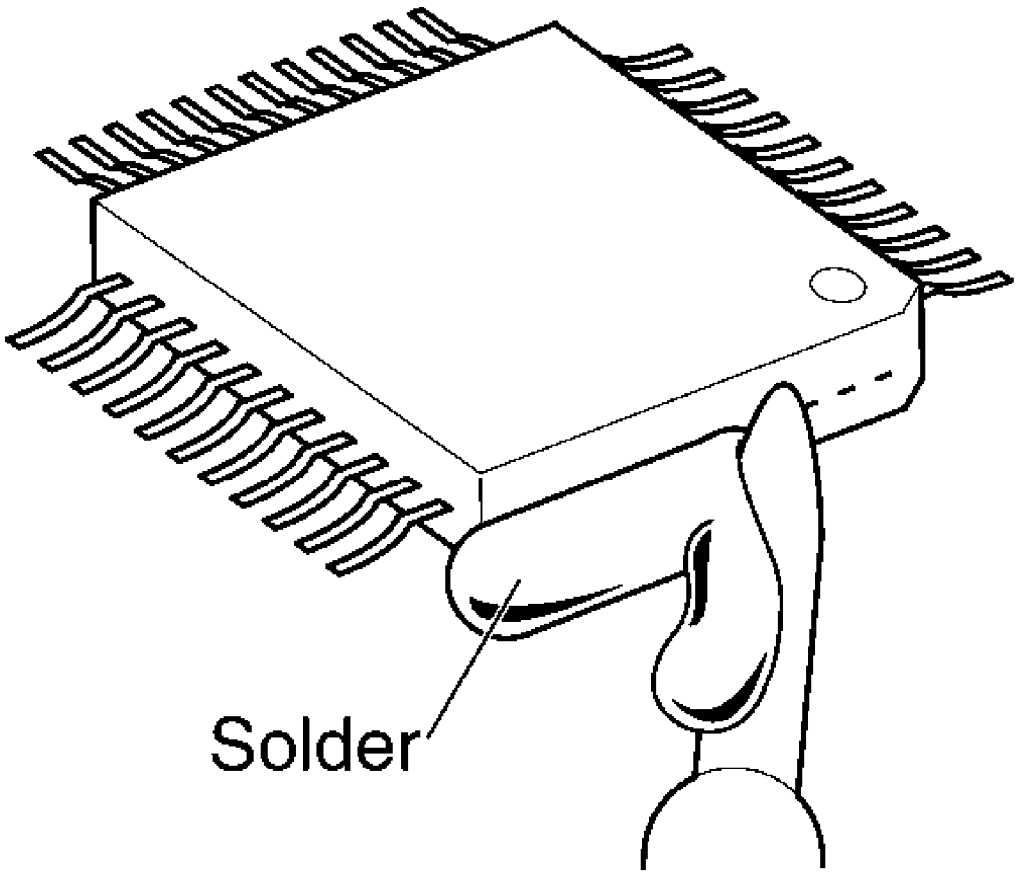

When you attach a new IC to the board, remove all solder left on the land with some tools like a soldering wire. If some solder is left at the joint on the board, the new IC will not be attached properly.

5.3. FLAT PACKAGE IC INSTALLATION PROCEDURE

1. Temporarily fix the FLAT PACKAGE IC, soldering the two marked pins.

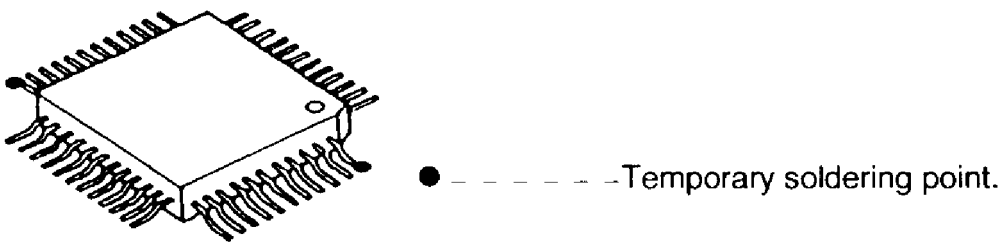

***Check the accuracy of the IC setting with the corresponding soldering foil.**

2. Apply flux to all pins of the FLAT PACKAGE IC.

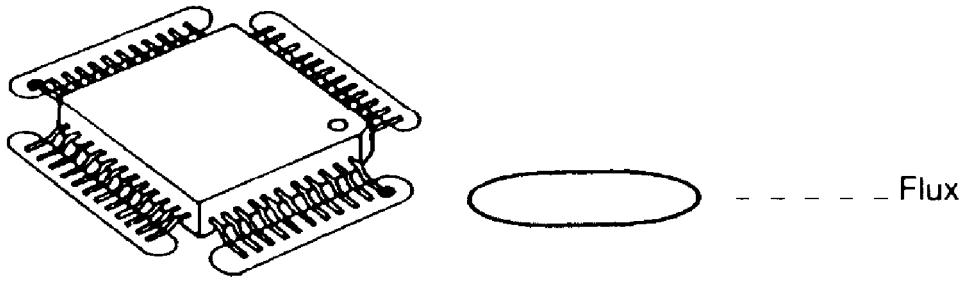

3. Solder the pins, sliding the soldering iron in the direction of the arrow.

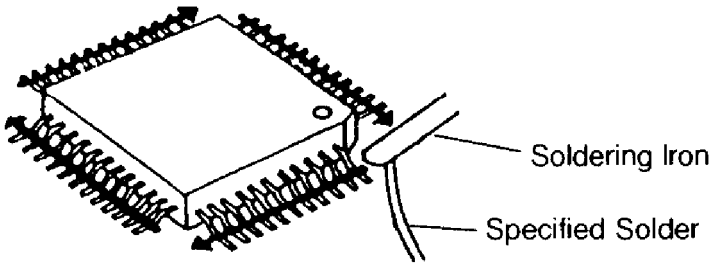

5.4. BRIDGE MODIFICATION PROCEDURE

1. Lightly resolder the bridged portion.
2. Remove the remaining solder along the pins using a soldering iron as shown in the figure below.

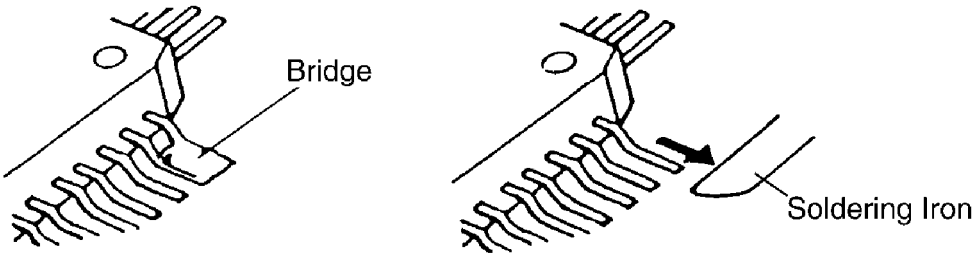

6. CIRCUIT OPERATIONS

6.1. CONNECTION DIAGRAM

6.2. GENERAL BLOCK DIAGRAM

The following is an outline of each device IC on the digital board. (Refer to 6.2.1. General Block Diagram.).

1. ASIC (IC501)
   Composed mainly of an address decoder and a modem control. Controls the general FAX operations.

Controls the operation panel I/F.
Controls the thermal head I/F and CIS I/F.
Performs the image processing.
CPU and Real time clock
Provides the reset pulse for each of the major ICs.

2. ROM (IC502)
Contains all of the program instructions on the unit operations.

3. Static RAM (IC504)
This memory is used mainly for the parameter working in the storage area.

4. Dynamic RAM (IC503)
This memory is used mainly for the parameter working in the storage area.

5. MODEM (IC505)
Performs the modulation and the demodulation for FAX communication.

6. Read Section
CIS image sensor to read transmitted documents.

7. Motor Driver (IC506)
Drives the transmission motor and the reception motor.

8. Thermal Head
Contains heat-emitting elements for dot matrix image printing.

9. Analog Board
Composed of ITS circuit and NCU circuit.

10. Sensor Section
Composed of a cover open sensor, a document sensor, a read position sensor, a paper top sensor and a film end sensor.

11. Power Supply Board Switching Section
Supplies +5V and +24V to the unit.

6.2.1. General Block Diagram

6.3. CONTROL SECTION

6.3.1. BLOCK DIAGRAM

6.3.2. MEMORY MAP

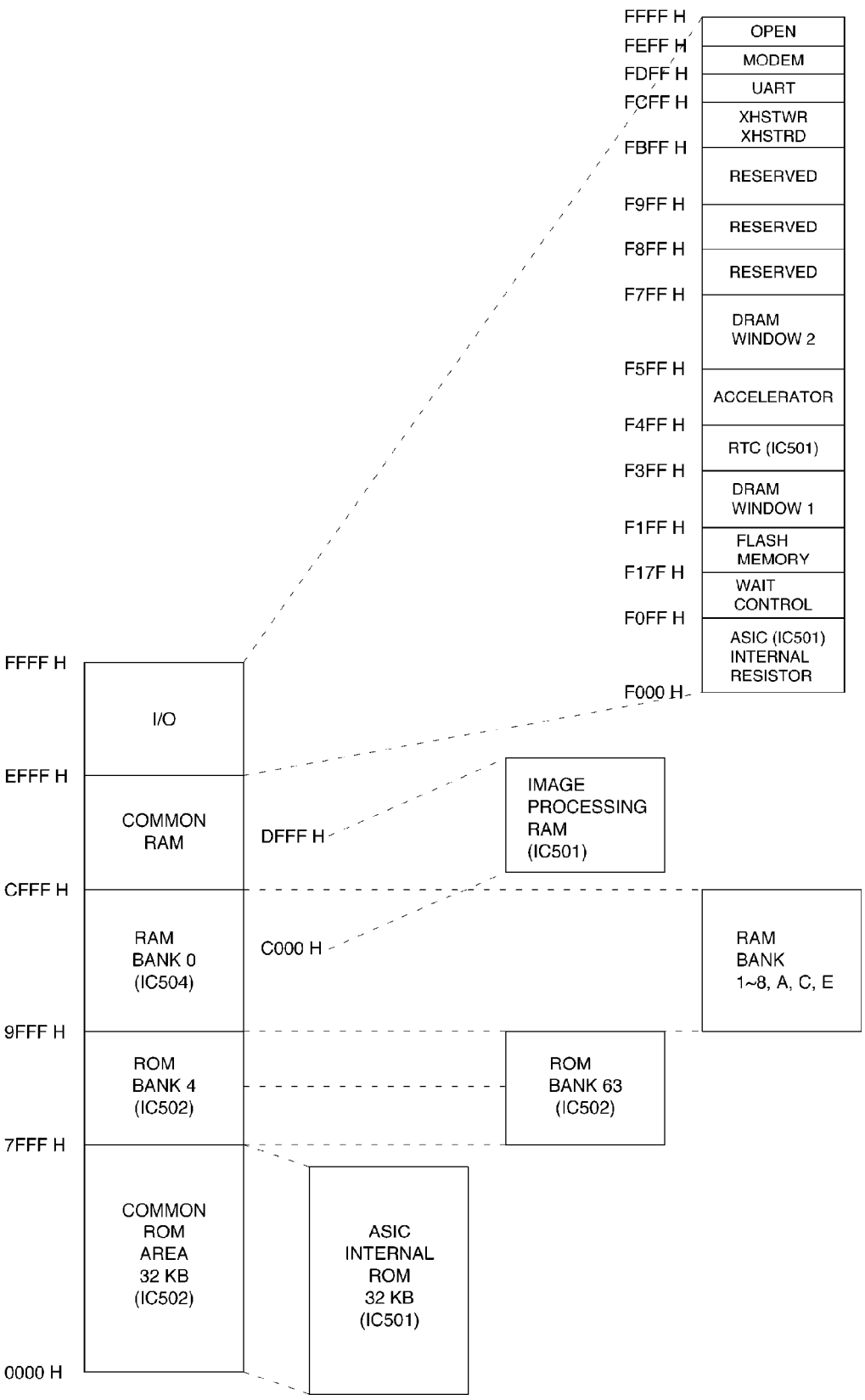

6.3.3. ASIC (IC501)

This custom IC is used for the general FAX operations.

1. **CPU:**
   This model uses a Z80 equivalent to the CPU operating at 8 MHz. Most of the peripheral functions are performed by custom-designed LSIs. Therefore, the CPU only works for processing the results.
2. **RTC:**
   Real Time Clock
3. **DECODER:**
   Decodes the address.
4. **ROM/RAM I/F:**
   Controls the SELECT signal of ROM or RAM and the bank switching.
5. **CIS I/F:**
   Controls the document reading.
6. **IMAGE DATA RAM:**
   This memory is programmed into the ASIC and uses 8 KB for the image processing. (See Fig. A.*)
7. **THERMAL HEAD I/F:**
   Transmits the recorded data to the thermal head.
8. **MOTOR I/F:**
   Controls the transmission motor which feeds the document.
   Controls the receiving motor which feeds the recording paper.
9. **OPERATION PANEL I/F:**
   Serial interface with Operation Panel.
10. **I/O PORT:**
    I/O Port Interface.
11. **ANALOG UNIT:**
    Electronic volume for the handset and the monitor.
    Sends beep tones, etc.

Fig. A

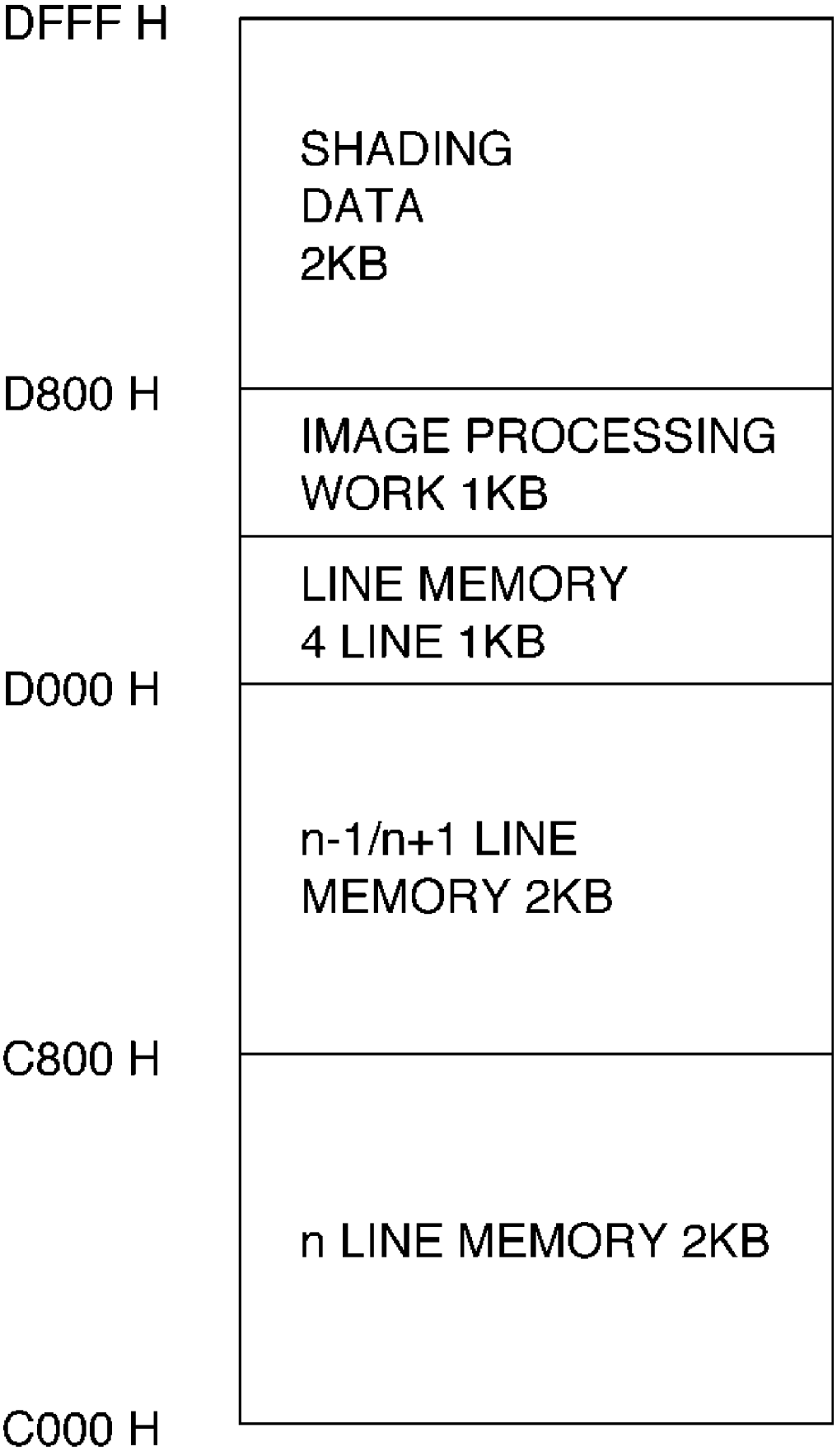
DFFF H
SHADING
DATA
2KB
D800 H
IMAGE PROCESSING
WORK 1KB
LINE MEMORY
4 LINE 1KB
D000 H
n-1/n+1 LINE
MEMORY 2KB
C800 H
n LINE MEMORY 2KB
C000 H

(CPU ADDRESS)

Note*:
This memory is incorporated into the ASIC (IC501) and used for the image processing.
Fig. A shows the memory map of the Image Data RAM.

6.3.4. ROM (IC502)

This 512KB ROM (EPROM or MASKROM) carries a common area of 32KB and bank areas which each have 8KB (BK4~BK63). The addresses from 0000H to 7FFFH are for the common area and from 8000H to 9FFFH are for the bank areas.

6.3.5. STATIC RAM (IC504)

This 32KB RAM carries a common area of 8KB and bank areas which each have 12KB. The addresses from 0000H to EFFFH are for the common area and from A000H to CFFFH are for the bank area.

6.3.6. DYNAMIC RAM (IC503)

The DRAM serves as CPU and receives memory.
The address is F200H~F3FFH (DRAM access window 1) and F600H~F7FFH (DRAM access window 2).

Descriptions of Pin Distribution (IC501)

NO.	SIGNAL	I/O	POWER SUPPLIED VOLTAGE	DESCRIPTION
1	AIN1	A	3.3V	CCD IMAGE SIGNAL INPUT
2	AIN2	A	3.3V	THERMISTOR TEMPERATURE WATCH INPUT
3	AIN3	A	3.3V	----------
4	AMON	A	3.3V	ANALOG SIGNAL MONITOR TERMINAL
5	VSSB		GND	POWER SOURCE (ANALOG GND)
6	VDDB		3.3V	POWER SOURCE (ANALOG +3.3V)
7	VDD(3.3V/B)		3.3V/BATT	POWER SOURCE (+3.3V/LITHIUM BATTERY)
8	X32OUT	O	3.3V/BATT	RTC (32.768KHz) CONNECTION
9	X32IN	I	3.3V/BATT	RTC (32.768KHz) CONNECTION
10	VSS		GND	GND
11	XBACEN	I	5V/BATT	BACKUP ENABLE
12	VDD (5V/B)		5V/BATT	POWER SOURCE (+5V/LITHIUM BATTERY)
13	XRAMCS	O	5V/BATT	RAM (IC504) CHIP SELECT
14	XRAMCS2	O	5V/BATT	----------
15	FTG	O	5V	SH SIGNAL OUTPUT FOR CIS (SI)
16	F1	O	5V	01 SIGNAL OUTPUT FOR CIS (CLK)
17	F2/OP	O	5V	OUTPUT PORT (RESERVED)

NO.	SIGNAL	I/O	POWER SUPPLIED VOLTAGE	DESCRIPTION
18	FR/OP	O	5V	OUTPUT PORT (RESERVED)
19	VIDRST/IOP	O	5V	OUTPUT PORT (PCTL)
20	SPHCLK/IOP	I	5V	INPUT PORT (PDET)
21	DARKON/ IOP	I	5V	INPUT PORT (JOG1)
22	ADSEL2/IOP	I	5V	INPUT PORT (JOG2)
23	CPC	I	5V	INPUT PORT (GND)
24	BELL	O	5V	----------
25	VDD (5V)		5V	POWER SOURCE (+5V)
26	VSS		GND	POWER SOURCE (GND)
27	RVN	I	5V	INPUT PORT (FILM END SENSOR SIGNAL)
28	IRDATXD/ IOP	O	5V	OUTPUT PORT (RESERVED)
29	IRDARXD/ IOP80	I	5V	INPUT PORT (TEST)
30	TXD/IOP	O	5V	OUTPUT PORT (RESERVED)
31	RXD/IOP	O	5V	OUTPUT PORT (RESERVED)
32	XRTS/IOP	O	5V	OUTPUT PORT (CID)
33	XCTS/IOP	O	5V	INPUT PORT (GND)
34	XDSR/IOP	O	5V	INPUT PORT (GND)
35	DCD/IOP	O	5V	INPUT PORT (GND)
36	XDTR/IOP	O	5V	INPUT PORT (VOX)
37	RI/CLK/IOP	O	5V	----------
38	TONE1	A	5V	TONE OUTPUT
39	TONE2	A	5V	TONE OUTPUT
40	VOLUREF	A	5V	ANALOG REF VOLTAGE
41	VOLUOUT	A	5V	VOLUME OUTPUT
42	VOLUIN	A	5V	VOLUME INPUT
43	MIDAT/IOP	O	5V	MIDAT
44	MICLK/IOP	O	5V	MICLK
45	MILAT/IOP	O	5V	MILAT
46	XRESCS1	O	5V	OUTPUT PORT (RESERVED)
47	IOP90	O	5V	OUTPUT PORT (SPMUTE)
48	VSS		GND	POWER SOURCE (GND)
49	VDD (5V)		5V	POWER SOURCE (+5V)
50	XNMI	I	5V	HIGH FIXED
51	CBUSY2	O	5V	RESERVED
52	CSO	O	5V	RESERVED
53	CBUSY1	I	5V	RESERVED
54	CCLK	I	5V	RESERVED
55	CSI	I	5V	RESERVED
56	IOP91	I	5V	INPUT PORT (MDLSEL)
57	IOP92	O	5V	OUTPUT PORT (BREAK)

NO.	SIGNAL	I/O	POWER SUPPLIED VOLTAGE	DESCRIPTION
58	FMEMCS/ IOP	O	5V	OUTPUT PORT (LINE RLY)
59	FMEMDO/ IOP	O	5V	OUTPUT PORT (EX HOOK)
60	FMEMDI/IOP	O	5V	OUTPUT PORT (DCN)
61	FMEMCLK/ IOP	I	5V	INPUT PORT (T/P)
62	XRESCS3/ OP	O	5V	OUTPUT PORT (OP RESET)
63	20KOSC/IOP	I	5V	INPUT PORT (BELL)
64	XHOLDAK	O	5V	NOT USED
65	VDD (3.3V)		3.3V	POWER SOURCE (+3.3V)
66	XOUT	O	3.3V	SYSTEM CLOCK (24MHz)
67	XIN	I	3.3V	SYSTEM CLOCK (24MHz)
68	VSS		GND	POWER SOURCE (GND)
69	VDD (5V)		5V	POWER SOURCE (+5V)
70	XTEST	O	5V	24MHz CLOCK
71	CPUCLK	O	5V	NOT USED
72	TEST1	I	5V	HIGH FIXED
73	TEST2	I	5V	HIGH FIXED
74	TEST3	I	5V	HIGH FIXED
75	TEST4	I	5V	HIGH FIXED
76	XMDMINT	I	5V	MODEM INTERRUPT
77	XMDMCS	O	5V	MODEM CHIP SELECT
78	VSS		GND	POWER SOURCE (GND)
79	VDD (3.3V)		3.3V	POWER SOURCE (3.3V)
80	XWAIT	I	5V	LOW FIXED
81	HOLD	I	5V	LOW FIXED
82	HSTRD/IOP	I	5V	LOW FIXED
83	HSTWR/IOP	I	5V	LOW FIXED
84	XOPRBE	O	5V	NOT USED
85	ADR15	O	5V	CPU ADDRESS BUS 15 (NOT USED)
86	ADR14	O	5V	CPU ADDRESS BUS 14 (NOT USED)
87	ADR13	O	5V	CPU ADDRESS BUS 13 (NOT USED)
88	XRAS/IOP	O	5V	DRAM (IC503) ROW ADDRESS STROBE
89	XCAS1/IOP	O	5V	DRAM (IC503) CULUM ADDRESS STROBE
90	XCAS2/IOP	O	5V	OUTPUT PORT (MODRST)
91	VSS		GND	POWER SOURCE (GND)
92	VDD (3.3V)		3.3V	POWER SOURCE (3.3V)
93	XRESCS2	O	5V	NOT USED

NO.	SIGNAL	I/O	POWER SUPPLIED VOLTAGE	DESCRIPTION
94	DB3	I/O	5V	CPU DATA BUS 3
95	DB2	I/O	5V	CPU DATA BUS 2
96	DB4	I/O	5V	CPU DATA BUS 4
97	DB1	I/O	5V	CPU DATA BUS 1
98	DB5	I/O	5V	CPU DATA BUS 5
99	DB0	I/O	5V	CPU DATA BUS 0
100	DB6	I/O	5V	CPU DATA BUS 6
101	DB7	I/O	5V	CPU DATA BUS 7
102	VSS		GND	POWER SOURCE (GND)
103	VDD (5V)		5V	POWER SOURCE (5V)
104	XROMCS	I/O	5V	ROM (IC502) CHIP SELECT
105	RD	O	5V	CPU RD
106	WR	O	5V	CPU WR
107	ADR0	O	5V	CPU ADDRESS BUS 0
108	ADR1	O	5V	CPU ADDRESS BUS 1
109	ADR2	O	5V	CPU ADDRESS BUS 2
110	ADR3	O	5V	CPU ADDRESS BUS 3
111	ADR4	O	5V	CPU ADDRESS BUS 4
112	ADR5	O	5V	CPU ADDRESS BUS 5
113	ADR6	O	5V	CPU ADDRESS BUS 6
114	ADR7	O	5V	CPU ADDRESS BUS 7
115	ADR8	O	5V	CPU ADDRESS BUS 8
116	ADR9	O	5V	CPU ADDRESS 9
117	ADR10	O	5V	CPU ADDRESS 10
118	ADR11	O	5V	CPU ADDRESS 11
119	ADR12	O	5V	CPU ADDRESS 12
120	VSS		GND	POWER SOURCE (GND)
121	VDD (5V)		5V	POWER SOURCE (+5V)
122	RBA0	O	5V	ROM/RAM BANK ADDRESS 0
123	RBA1	O	5V	ROM/RAM BANK ADDRESS 1
124	RBA2	O	5V	ROM/RAM BANK ADDRESS 2
125	RBA3	O	5V	ROM/RAM BANK ADDRESS 3
126	RBA4	O	5V	ROM/RAM BANK ADDRESS 4
127	RBA5	O	5V	ROM/RAM BANK ADDRESS 5
128	RBA6/IOP96	O	5V	NOT USED
129	IOP95	O	5V	OUTPUT PORT (SEN LED ON)
130	IOP94	O	5V	OUTPUT PORT (CIS ON)
131	IOP93	O	5V	OUTPUT PORT (CIS LED ON)
132	XRESET	I	5V	RESET INPUT
133	XORESET	O	5V	RESET OUTPUT
134	VDD (5V)		5V	POWER SOURCE (+5V)
135	VSS		GND	POWER SOURCE (GND)
136	XRESETI	I	5V	RESET INPUT
137	WDERR	O		WATCHED ERROR OUTPUT SIGNAL

NO.	SIGNAL	I/O	POWER SUPPLIED VOLTAGE	DESCRIPTION
138	XRSTSWI	I	5V	HIGH FIXED
139	XRSTSWO	O	5V	NOT USED
140	XRESETO	O	5V	NOT USED
141	IOP	O	5V	THERMAL HEAD POWER ON/OFF CONTROL
142	STB1	O	5V	STROBE SIGNAL OUTPUT TO THERMAL HEAD
143	STB2	O	5V	STROBE SIGNAL OUTPUT TO THERMAL HEAD
144	VDD (3.3V)		3.3V	POWER SOURCE (3.3V)
145	VSS		GND	POWER SOURCE (GND)
146	STB3	O	5V	STROBE SIGNAL OUTPUT TO THERMAL HEAD
147	STB4	O	5V	NOT USED
148	STBNP	I	5V	LOW FIXED
149	THDAT	O	5V	RECORDED IMAGE OUTPUT
150	THCLK	O	5V	CLOCK OUTPUT FOR DATA TRANSFER
151	THLAT	O	5V	PULSE OUTPUT FOR DATA LATCH
152	RM0/IOP	I	5V	INPUT PORT (P-TOP)
153	RM1/IOP	I	5V	INPUT PORT (MPOS)
154	RM2/IOP	O	5V	NOT USED
155	RM3/IOP	O	5V	NOT USED
156	RXE/IOP	I	5V	PULL DOWN
157	TMO	O	5V	MOTOR A PHASE
158	VDD (5V)		5V	POWER SOURCE (+5V)
159	VSS		GND	POWER SOURCE (GND)
160	TM1/IOP	O	5V	MOTOR B PHASE
161	TM2/IOP	O	5V	MOTOR /A PHASE
162	TM3/IOP	O	5V	MOTOR /B PHASE
163	TXE/IOP	O	5V	MOTOR ENABLE SIGNAL
164	KSTART	O	5V	OPERATION PANEL CONTROL
165	KLATCH	O	5V	OPERATION PANEL CONTROL
166	KSCLK	O	5V	OPERATION PANEL CONTROL
167	KTXD	O	5V	OPERATION PANEL CONTROL
168	KRXD	I	5V	OPERATION PANEL CONTROL
169	ADSEL1	O	5V	CHANNEL SELECT SIGNAL FOR AIN2
170	VSSC		GND	POWER SOURCE (ANALOG GND)
171	VDDC		3.3V	POWER SOURCE (ANALOG +3.3V)
172	VSSA		GND	POWER SOURCE (ANALOG GND)
173	VDDA		3.3V	POWER SOURCE (ANALOG +3.3V)
174	VREFB	A	3.3V	A/D CONVERTER'S ZERO STANDARD VOLTAGE OUTPUT

NO.	SIGNAL	I/O	POWER SUPPLIED VOLTAGE	DESCRIPTION
175	VCL	A	3.3V	ANALOG PART STANDARD VOLTAGE SIGNAL
176	VREFT	A	3.3V	A/D CONVERTER'S FULL SCALE VOLTAGE OUTPUT

6.3.7. RESET CIRCUIT (WATCH DOG TIMER)

The output signal from pin 1 of the voltage detect IC (IC509) is input to the ASIC (IC501) 136 pin. Then the output signal from pin 133 of the ASIC (IC501) resets the ASIC.

Circuit Diagram

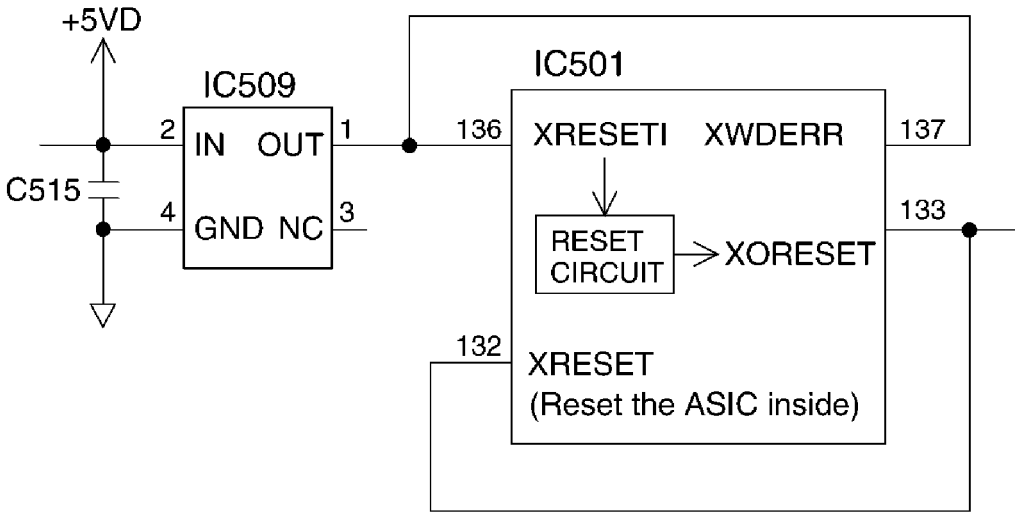

1. During a momentary power interruption, a positive reset pulse of 46~51 msec is generated and the system is reset completely.

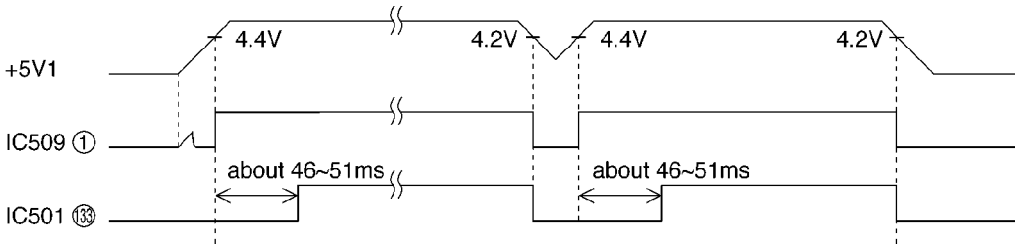

2. When pin 132 and 133 of IC501 become low level, they will prohibit the SRAM (IC504) from changing data.
The SRAM (IC504) will go into the backup mode, when they are backed up by a lithium battery.

3. The watch dog timer, built-in the ASIC (IC501), is initialized by the CPU about every 1.5 ms.
When a watch dog error occurs, pin 137 of the ASIC (IC501) becomes low level.

The terminal of the $\overline{\text{WDERR}}$ signal is connected to the reset line, so the $\overline{\text{WDERR}}$ signal works as the reset signal.

6.3.8. SRAM AND RTC BACKUP CIRCUIT

1. Function
   This unit has a lithium battery (BATT) which works for the SRAM (IC504) and Real Time Clock IC (RTC: inside IC501).
   The user parameters for autodial numbers, the system setup data and others are stored in the SRAM (IC504).
   The RTC continues to work, backed up by a lithium battery even when the power switch is OFF.
2. SRAM (IC504) Backup Circuit Operation
   When the power switch is turned ON, power is supplied through pin 12 of IC501 to the SRAM (IC504). At this time, the voltage at pin 28 of the SRAM is 5V. When the power switch is turned OFF, the BATT supplies power to the SRAM through J501, R562 and D504. The voltage at pin 28 of the SRAM is about +2.5V. When the power switch is OFF and the voltage of +5V decreases, the voltage detect IC (IC509) outputs "Low " level and the IC501 outputs the reset signal. Pin 28 of the SRAM becomes roughly the same voltage as the battery voltage. At this point, pin 20 (CS) of IC504 becomes high level, causing the SRAM to go into the backup mode, in which the power consumption is lower.
3. RTC Inside (IC501) Backup Circuit Operation
   When the power switch is turned ON, power is supplied through DA501 to the RTC (inside IC501). At this time, the voltage at pin 7 of the IC501 is +3.3V. When the power switch is turned OFF, the BATT supplies power to RTC through DA501. Thevoltage at pin 7 of IC501 is about +2.5V. When the power switch is OFF and the voltage of +3.3V decreases, pin 7 of RTC (IC501) becomes roughly the same voltage as the battery voltage. RTC goes into the backup mode, in which the power consumption is lower.

Circuit Diagram

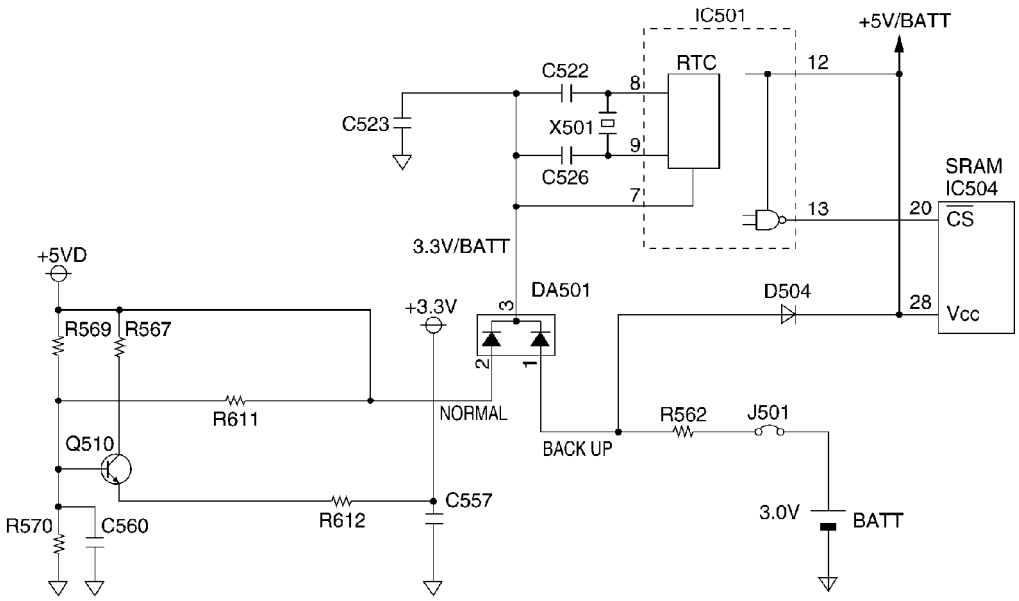

6.3.9. SUPERVISION CIRCUIT FOR THE THERMAL HEAD TEMPERATURE

1. Function

The thermistor changes the resistor according to the temperature and uses the thermistor's characteristics. The output of pin 169 of IC501 becomes a low level. Then when it becomes a high level, it triggers point Ⓐ. In point Ⓒ, according to the voltage output time, the thermal head's temperature is detected.

After the thermal head temperature is converted to voltage in Ⓑ, it is then changed to digital data in the A/D converter inside IC501. The CPU decides the strobe width of the thermal head according to this value. Therefore, this circuit can keep the thermal head at an even temperature in order to stabilize the printing density and prevent the head from being overheated.

Circuit Diagram

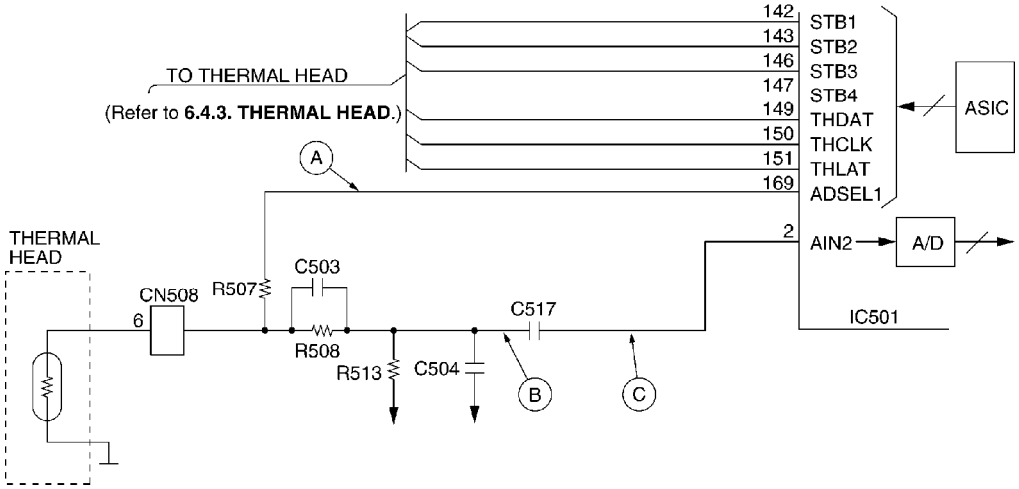

Timing Chart

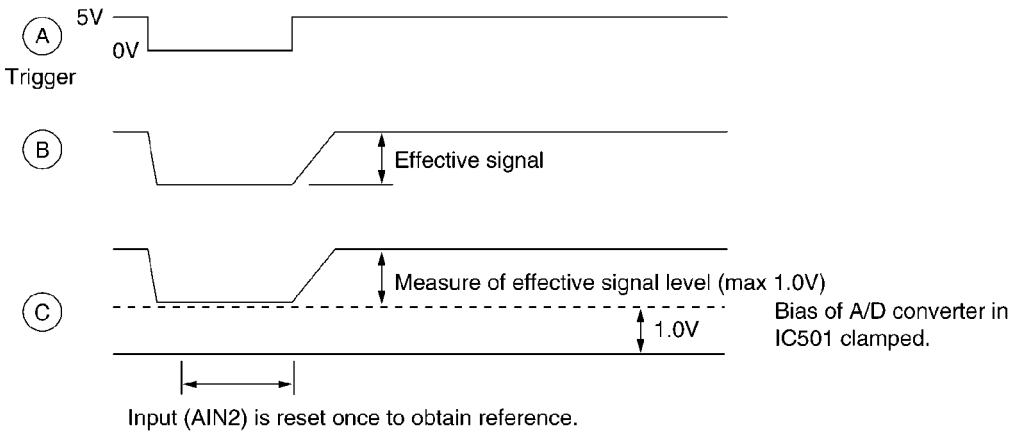

Input (AIN2) is reset once to obtain reference.

6.4. FACSIMILE SECTION

6.4.1. IMAGE DATA FLOW DURING FACSIMILE OPERATION

COPY (Fine, Super-Fine, Half Tone)

1. Line information is read by CIS (to be used as the reference white level) via route ①, and is input to IC501. Refer to 6.4.2. Block Diagram.

2. In IC501, the data is adjusted to a suitable level for A/D conversion in the Analog Signal Processing Section, and via route ② it is input to A/D conversion (8 bit). After finishing A/D conversion, the data is input to the Image Processing Section via route ③. Then

via routes ④ and ⑤, it is stored in RAM as shading data.

3. The draft's information that is read by CIS is input to IC501 via route ①. After it is adjusted to a suitable level for A/D conversion via route ②, the draft's information is converted to A/D (8 bit), and it is input to the Image Processing Section. The other side, the shading data which flows from RAM via routes ⑥ and ⑦, is input to the Image Processing Section. After finishing the draft's information image processing, white is regarded as "0" and black is regarded as "1". Then via routes ④ and ⑤, they are stored in RAM.

4. The white/black data stored as above via routes ⑥ and ⑧ is input to the P/S converter. The white/black data converted to serial data in the P/S converter is input to the Thermal Head via route ⑨ and is printed out on recording paper.

Note:
Standard : Reads 3.58 times/mm
Fine : Reads 7.7 times/mm
Super-Fine : Reads 15.4 times/mm

Transmission

1. Same processing as COPY items 1 - 3.
2. The data stored in the RAM of IC501 is output from IC501 via routes ⑥ and ⑩, and is stored in the system bus.

Via route ⑪, it is stored in the communication buffer inside DRAM (IC503).

3. While retreiving data stored in the communication buffer synchronous with the modem, the CPU (inside IC501) inputs the data to the modem along route ⑫, where it is converted to serial analog data and forwarded over the telephone lines via the NCU Section.

Reception

1. The serial analog image data is received over the telephone lines and input to the modem via the NCU section, where it is demodulated to parallel digital data. Then the CPU (IC501) stores the data in the communication buffer DRAM (IC503) along route ⑫.
2. The data stored in DRAM (IC503) is decoded by the CPU (IC501) via route ⑫, and is stored in DRAM (IC503) via routes ⑬ and ⑤.
3. Same processing as COPY item 4.

6.4.2. Block Diagram

6.4.3. THERMAL HEAD

1. Function

   This unit utilizes the state of the art thermal printer technology. The ink film is chemically processed. The ink film is comprised of two parts: an ink layer and a base film. When the thermalhead contacts this ink film, it emits heat momentarily, and the ink layer is melted and transferred to the paper. If this continues, letters and/or diagrams appear, and the original document is reproduced.

COMPOSITION OF THE RECEIVE RECORD SECTION (THERMAL RECORDING FORMAT)

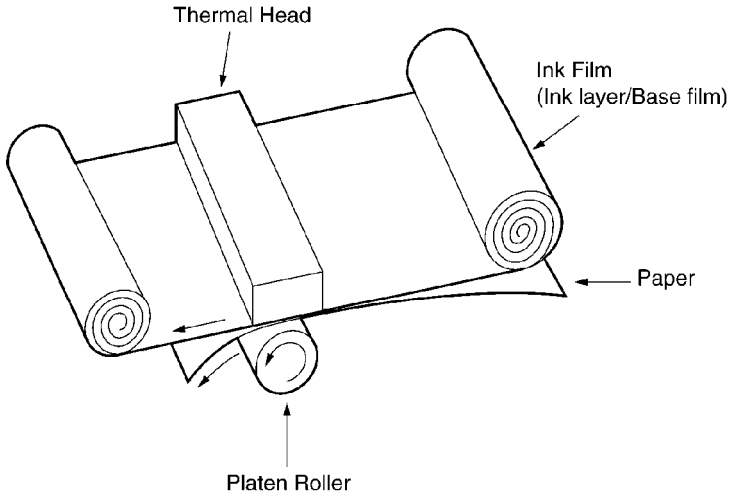

Thermal Transfer

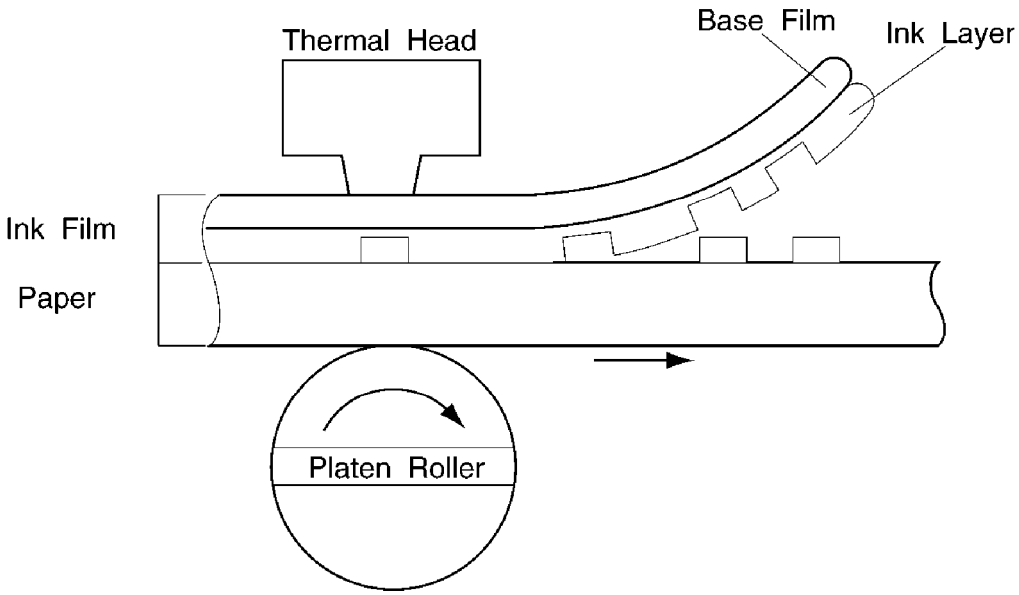

2. Circuit Operation

Refer to the block diagram and the timing chart on the following page.

There are 27 driver ICs aligned horizontally on the thermal head and each one of these ICs can drive 64 heat-emitting registers. This means that one line is at a density of 64×27=1728 dots=(8 dots /mm).

White/Black (white=0, black=1) data in one line increment is synchronized at IC501 pin 150 (THCLK), and sent from IC501 pin 149 (THDAT) to the shift register of the ICs. The shift registers of

the 27 ICs are connected in series, and upon the shift of the 1728 dot increment, the shift register becomes filled with data, and a latch pulse is emitted to each IC from IC501 pin 151 (THLAT). With this latch pulse, all the contents of the shift registers are latched to the latch registers. Thereafter, through the addition of strobes from the IC501 pins (142, 143, 146), only the dot location of black (=1) among latched data activates the driver, and the current passes to heat the emitting body to cause heat emission.
Here, the three line strobes, STB1 to STB3, impress at intervals of 9.216 msec, as required for one-line printout.
The sequence is shown on the next page. [Moreover, for the strobe width, the thermistor value inside the thermal head is detected according to IC501 pin 2. Depending on that value, the strobe width is recorded in ROM (IC502). Accordingly, the strobe width is determined.]
When the thermal head is not used, the IC501 (141, THON) becomes low , Q501 turns OFF, IC508 turns OFF, and the +24V power supply for the thermal head driver is not impressed to protect the IC.

Circuit Diagram

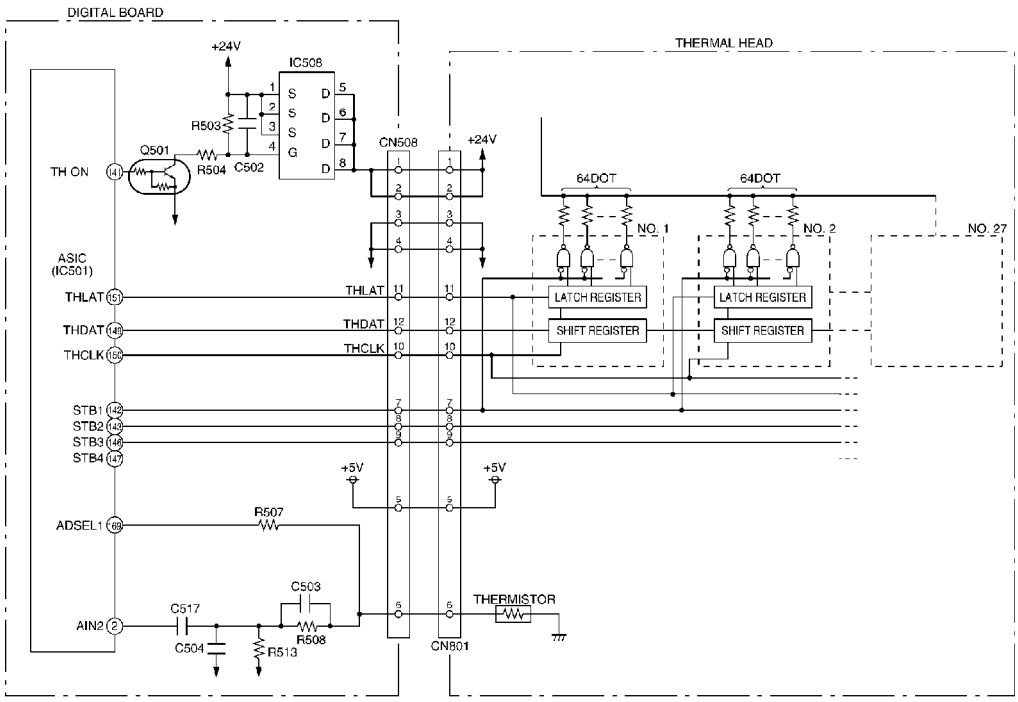

Timing Chart

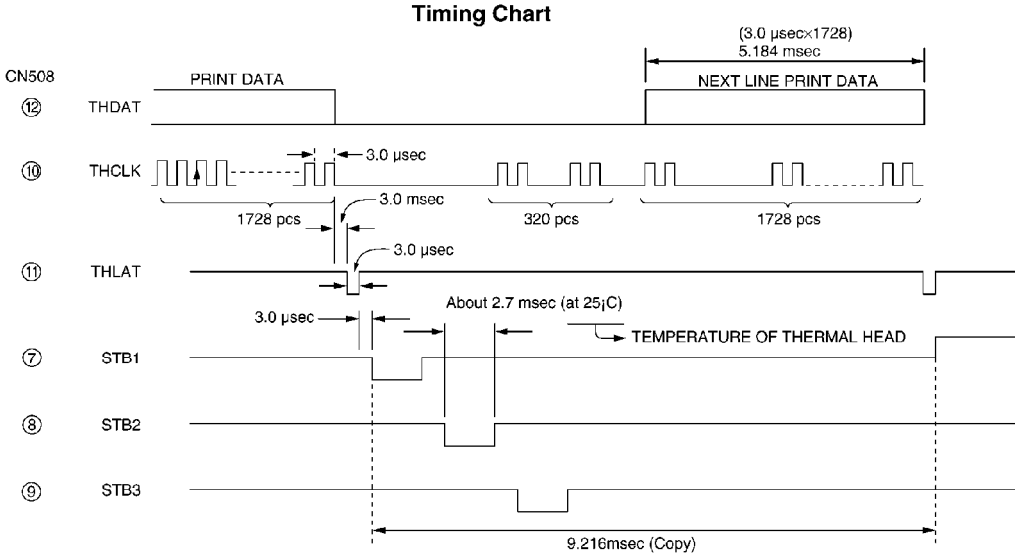

6.4.4. SCANNING BLOCK

The scanning block of this device consists of a control circuit and a contact image sensor made up of a celfoc lens array, an LED array, and photoelectric conversion elements.

Circuit Diagram

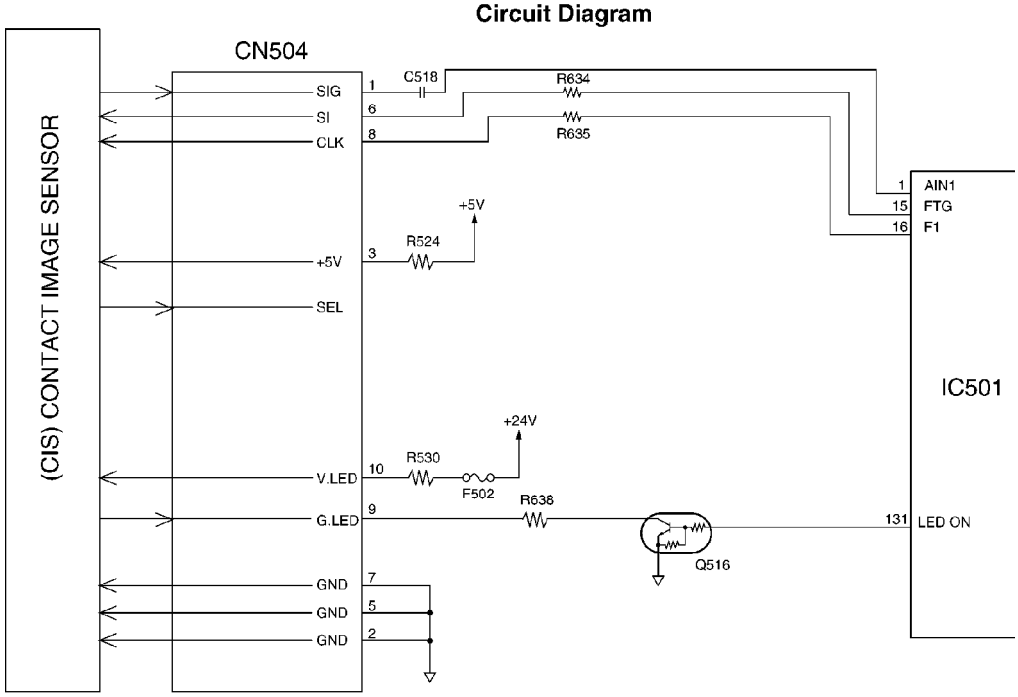

When an original document is inserted and the start button pressed, pin 131 of IC501 goes to a high level and the transistor Q516 turns on.This applies voltage to the LED array to light it. The contact image sensor is driven by each of the FTG-F1 signals output from IC501, and the original image illuminated by the LED array undergoes photoelectric conversion to output an analog image signal (SIG). The analog image signal is input to the system ASIC on AIN1 (pin 1 of IC501) and converted into 8-bit data by the A/D converter inside IC501. Then this signal undergoes digital processing in order to obtain a high-quality image.

6.4.5. STEPPING MOTOR DRIVE CIRCUIT

1. Function

The stepping motor works for both transmission and reception.

2. Motor

During motor driving, pin 163 of ASIC IC501 becomes a high level, and Q515 turns on. As a result, +24V is supplied to the motor coil. Stepping pulses are output from ASIC IC501 pins, 157, 160~162, causing driver IC506 pins, 15~12 to drive the motor coil. The motor coil is energized sequentially in 2 phase increments, which causes a 1-step rotation. A 1-step rotation feeds 0.13 mm of recording paper or document paper.

The timing chart is below.

Stepping Monitor Timing Chart

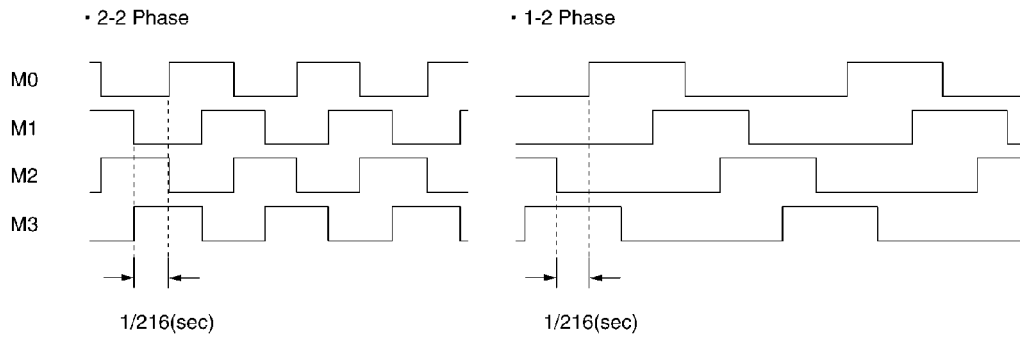

Stepping Motor Drive Mode

Function	Mode	Phase Pattern	Speed
Copy	Fine	1-2	216 pps
FAX	Standard	2-2	216 pps
	Fine or Half tone	1-2	216 pps
Paper Feed	———	2-2	216 pps
Stand-by	———	All phases are currently off.	None

Circuit Diagram

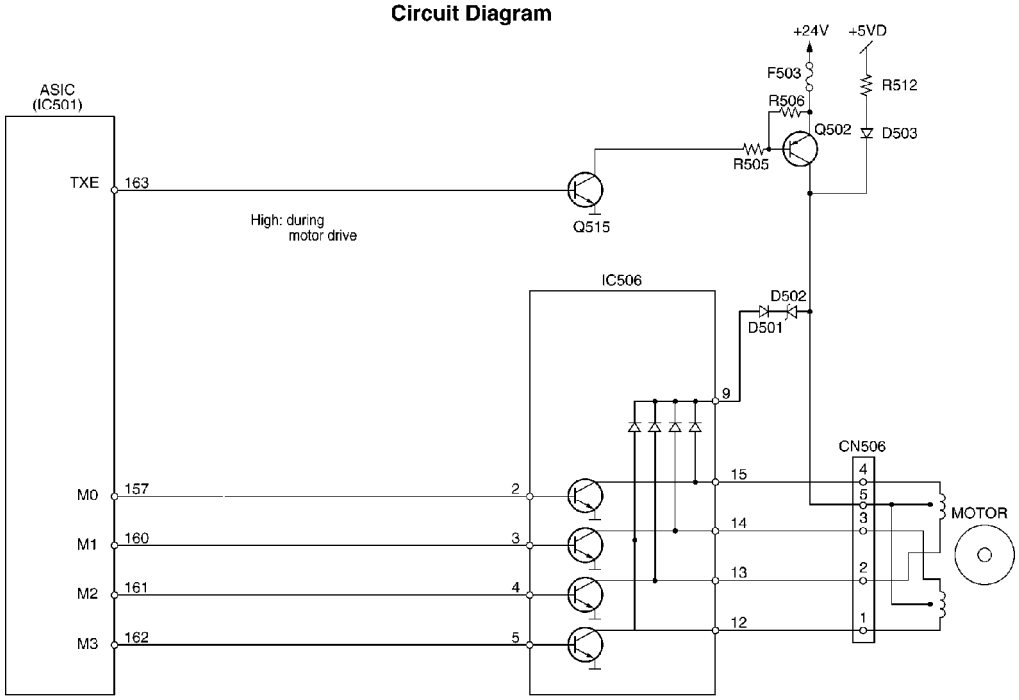

When the motor suspends while it is in the receive mode (about 70~80 msec), pin 163 of ASIC IC501 becomes a low level and Q515 turns OFF. Then Q502 also turns OFF, and instead of +24 V, +5 V is supplied through D503 so that the motor is held in place. When the system is in the stand-by mode, all of the motor drive transistors turn OFF. Consequently, the motor current stops.

6.4.6. GEAR SECTION

This model provides a motor-driven gear mechanism for transmitting/copying documents and printing fax data. In this chapter, you will see how the gears work to select and operate a mode and how the gear section, sensors and rollers mechanically work during the main operations (FAX transmission, FAX reception and Copy).

6.4.6.1. Mode Selection (See Fig. 1)

When a motor with Drive Motor Gear attached rotates clockwise (CW), Swing Gear C engages G15 and drives G14 to rotate counterclockwise. This operation provide four mode options (A: Transmit mode, B: Paper-Pickup mode, C: Receive mode and D: Copy mode) selected by the Sensor Switch. (The Sensor Switch Lever's position in the CAM (G15) controlled by the software selects a specific mode.) You can see which mode is selected by confirming the Mode Marker's position as shown in / Fig. 1-a~1-d.
(Ex. If the Mode Marker is in position A, a transmit mode is selected.)

Note:
The arrows show the directions in which the active gears turn around.

Fig. 1: Mode Selection

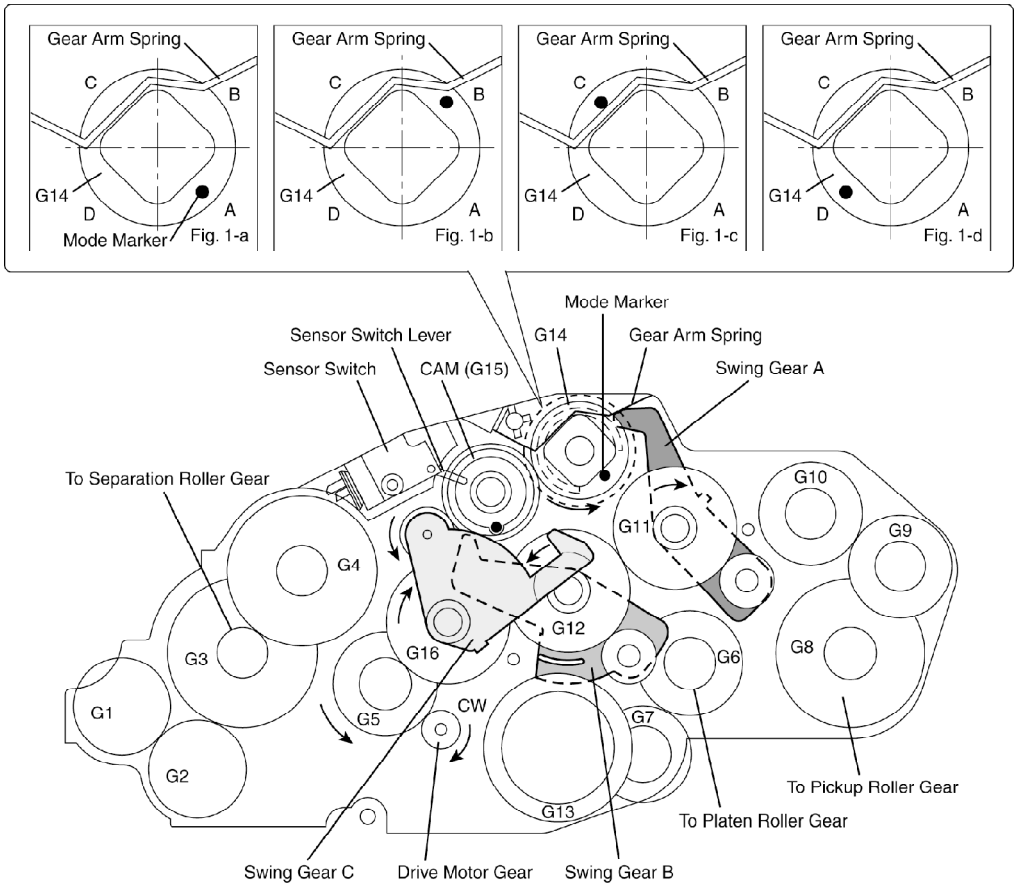

6.4.6.2. Mode Operation

Once a mode is selected, the Drive Motor Gear rotates counterclockwise (CCW) and then the controlling positions of Swing Gears A, B and C determine which gears convey their drive power in each mode.

A. Transmit mode (See Fig. A.) :
Swing Gear C engages G4 and conveys its power to the Separation Roller Gear through G3 and sets the Separation Roller for feeding documents.

Fig. A: Transmit mode

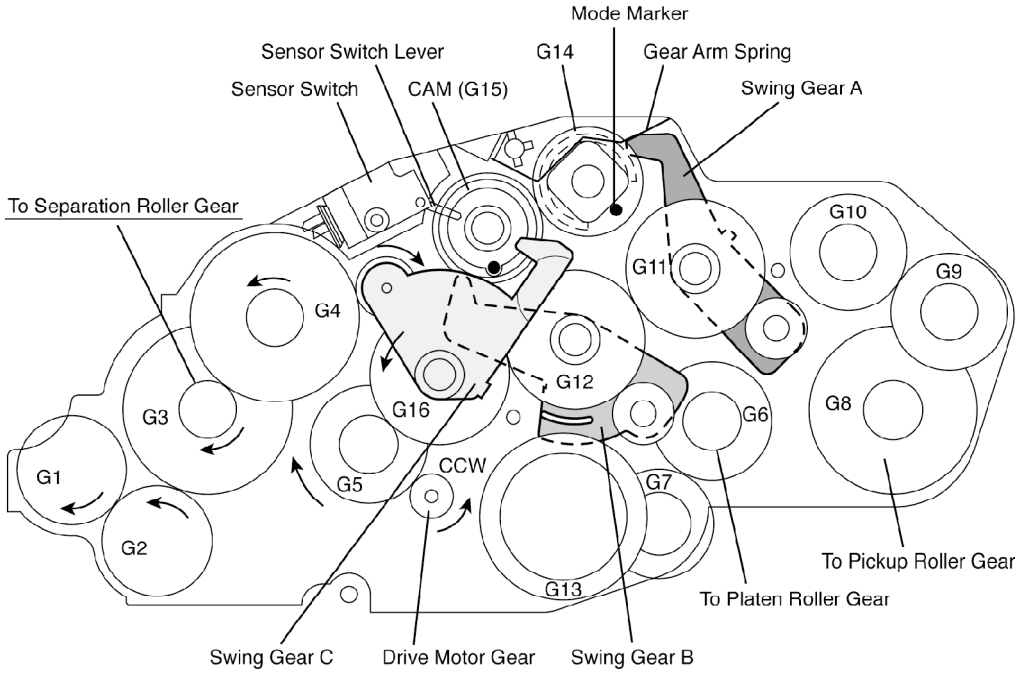

B. Paper-Pickup mode (See Fig. B) :

Swing Gear A engages G10 and provides its power to the Pickup Roller Gear through G8. The Pickup Roller picks up and pre-feeds a recording paper until the recording paper pushes up the PAPER TOP SENSOR* lever.

Fig. B: Paper-Pickup mode

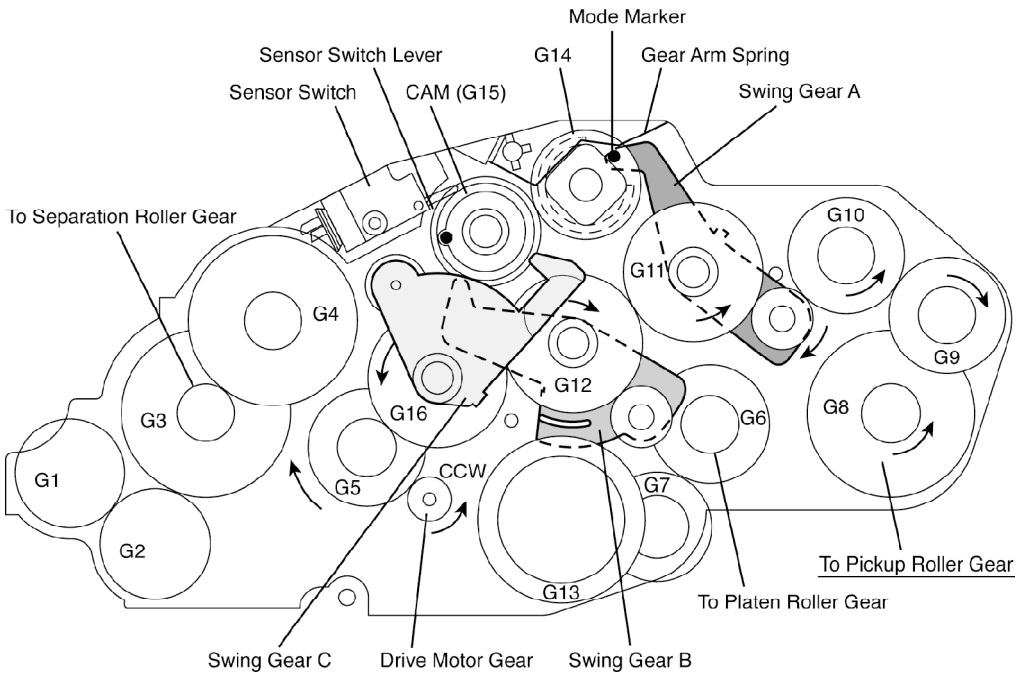

Note* :

See "Sensor Location" in 6.5. SENSORS AND SWITCHES.

C. Receive mode (See Fig. C.) :

Swing Gear B engages G13 and conveys its power to the Platen Roller Gear through G6. Then, the Platen Roller feeds recording paper for printing the received data.

Fig. C: Receive mode

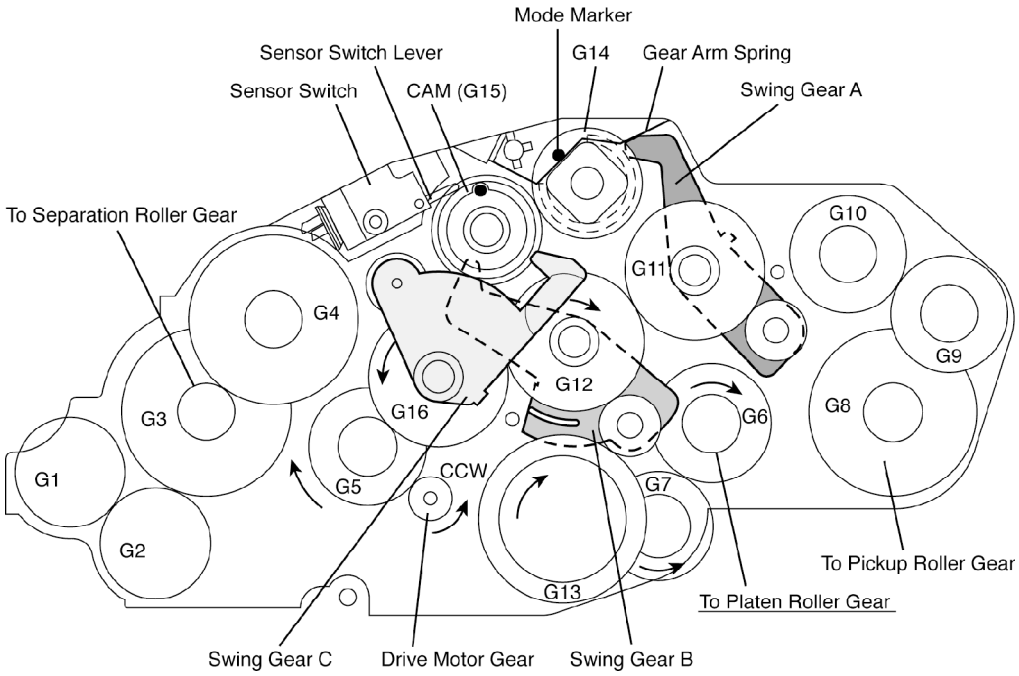

D. Copy mode (See Fig. D.) :

Swing Gears B and C engages G13 and G4 respectively, and then G6 and G3 drive the Pickup Roller Gear and the Separation Roller Gear for feeding recording paper and documents when the unit is in the copy operation.

Fig. D: Copy mode

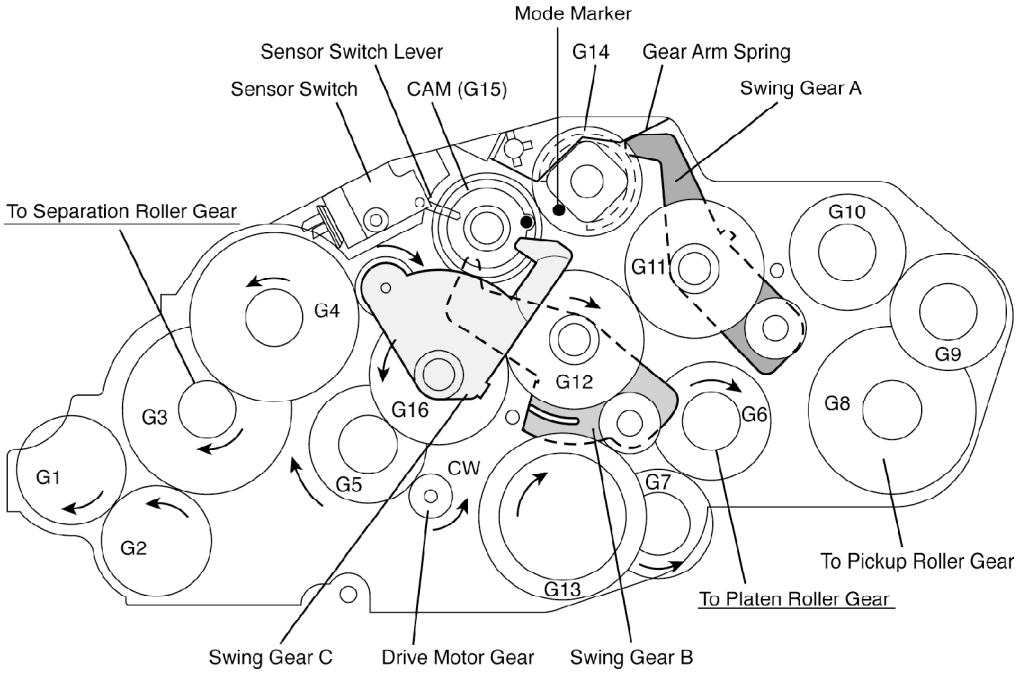

6.4.6.3. Mechanical movements in the main operations (transmitting documents, receiving faxes and copying)

6.4.6.3.1. Idle status

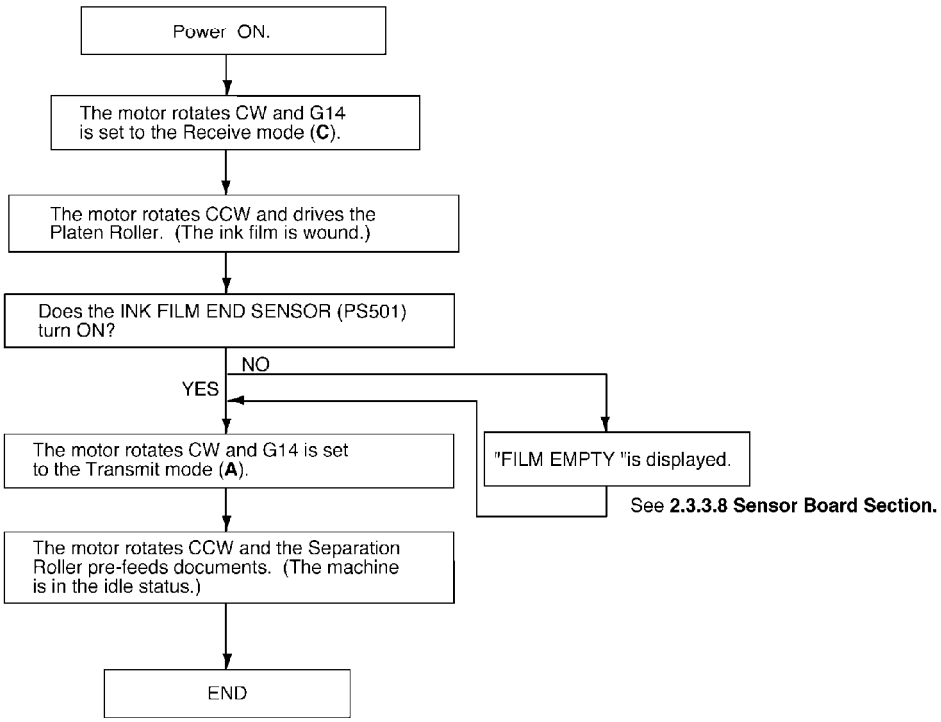

Note: See **"Sensor Locations"** in **6.5. SENSORS AND SWITCHES.**

6.4.6.3.2. Transmitting documents

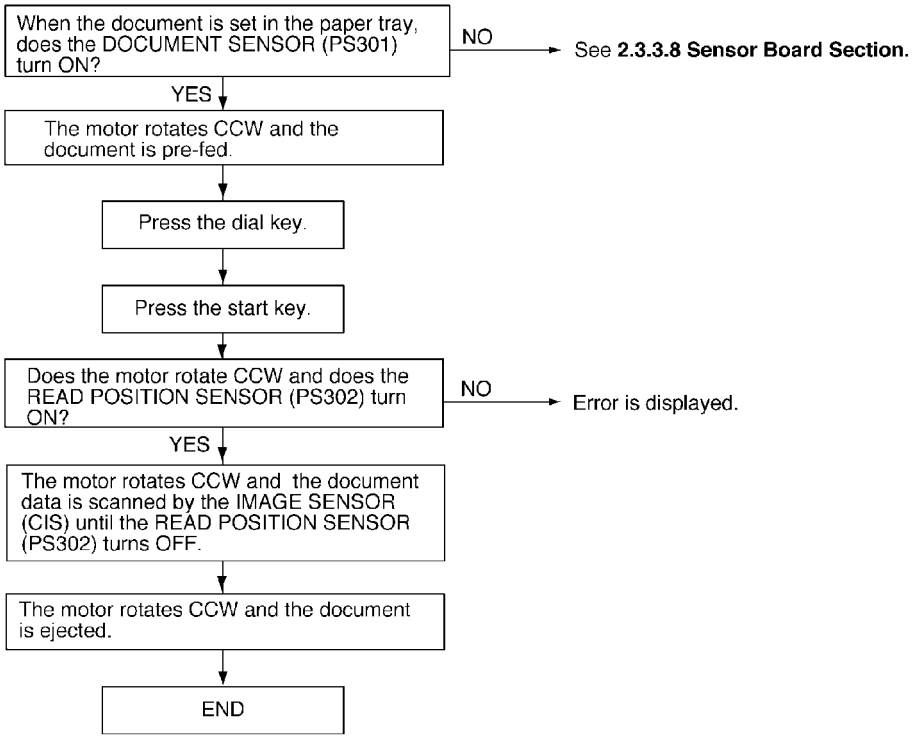

6.4.6.3.3. Receiving FAX

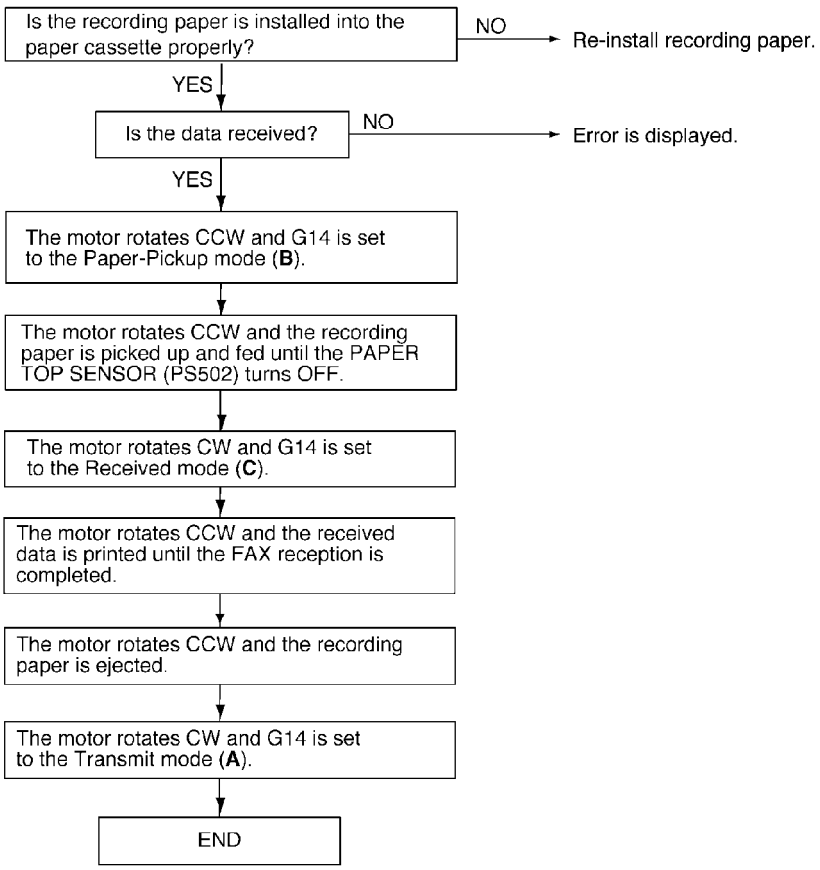

Note: See **"Sensor Locations"** in **6.5. SENSORS AND SWITCHES.**

6.4.6.3.4. Copying

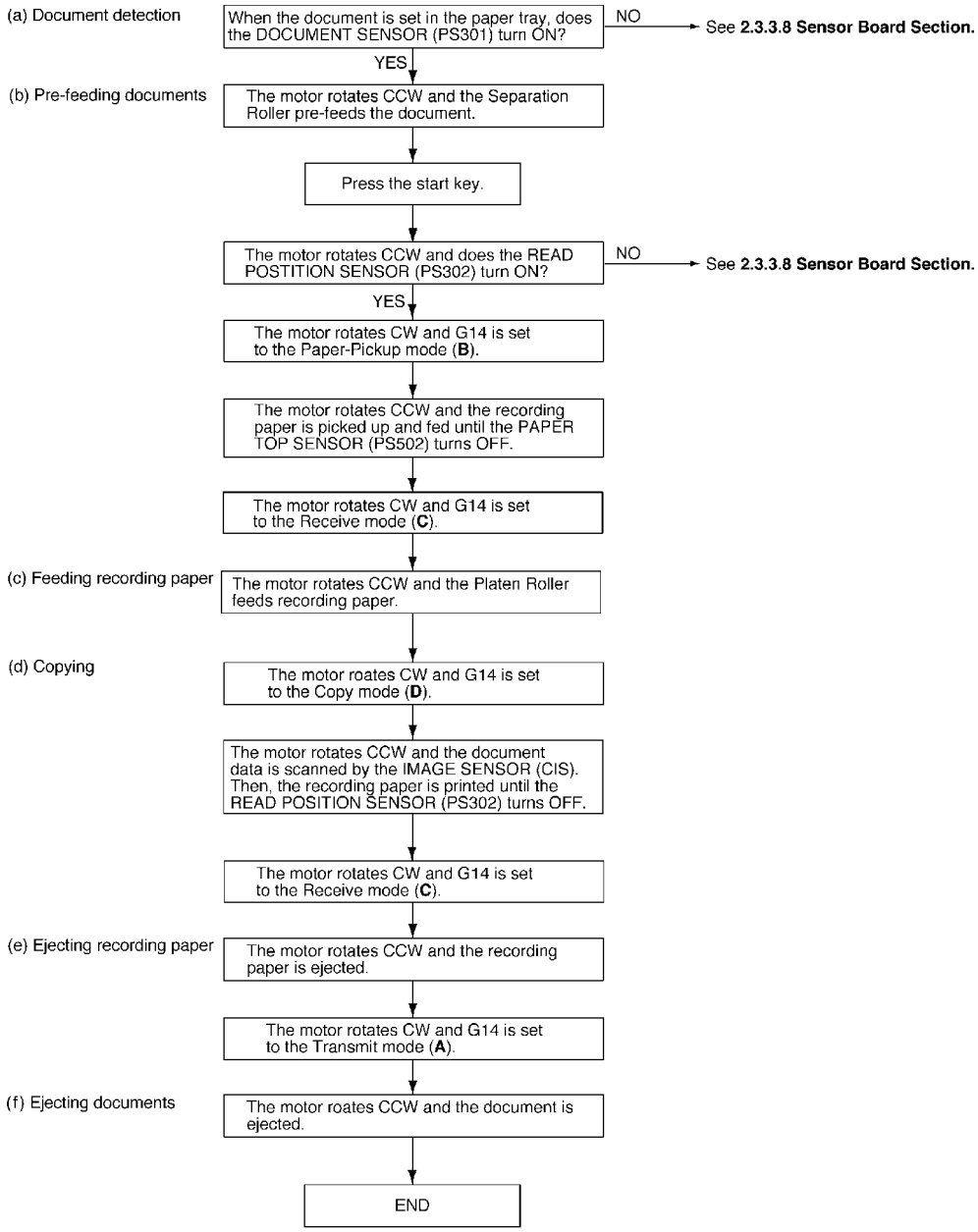

Note: See **"Sensor Locations"** in **6.5. SENSORS AND SWITCHES.**

6.5. SENSORS AND SWITCHES

All of the sensor and switches are shown below.

Sensor Circuit Location	Sensor	Sensor or Switch Name	Message Error
Operation Panel	PS301	Document	[CHECK DOCUMENT]
	PS302	Document Read Position	[REMOVE DOCUMENT]
	PS303	Cover Open	[CHECK COVER]
	SW401	Hook	———
Digital PCB	PS501	Film End	[FILM EMPTY]
	PS502	Paper Top	[PAPER JAMMED]
Motor Block	SW	Motor Position	———

Note:
See 2.5. TEST FUNCTIONS. (#815: Sensor Check)

Sensor Locations

1. [Read Position Sensor (PS302)]

When a document is brought to the read position, the shelter plate is lifted, the phototransistor becomes ON, and the input signal of IC301-20 pin (Operation) becomes a low level. When there is no document at the read position, the shelter plate closes the sensor light, the phototransistor becomes OFF, and the input signal of IC301-20 pin (Operation) becomes a high level. (When checking this sensor, the IC301-9 pin becomes a low level.)

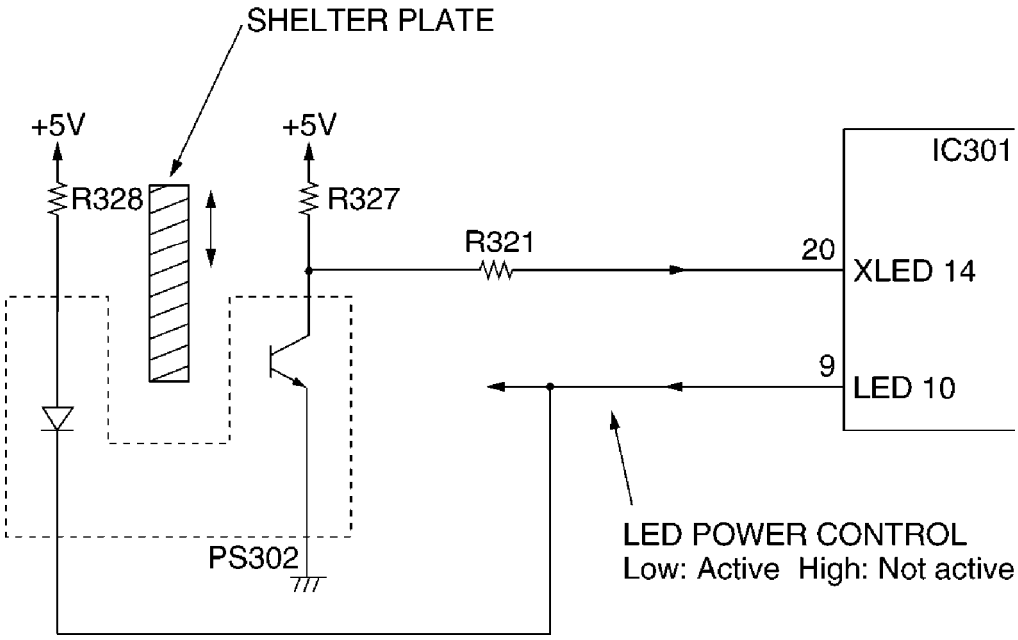

Operation Board

	Phototransistor	Signal (IC301-20 pin)
Out of the Read Position	OFF	High level
At the Read Position	ON	Low level

2. [Document Sensor (PS301)]

When a document is set, the shelter plate closes the sensor light, the phototransistor becomes OFF, and the input signal of IC301-20 pin (Operation) becomes a high level. When there is no document, the shelter plate is lifted, the phototransistor becomes ON, and the input signal of IC301-20 pin (Operation) becomes a low level. (When checking this sensor, the IC301-4 pin becomes a low level.)

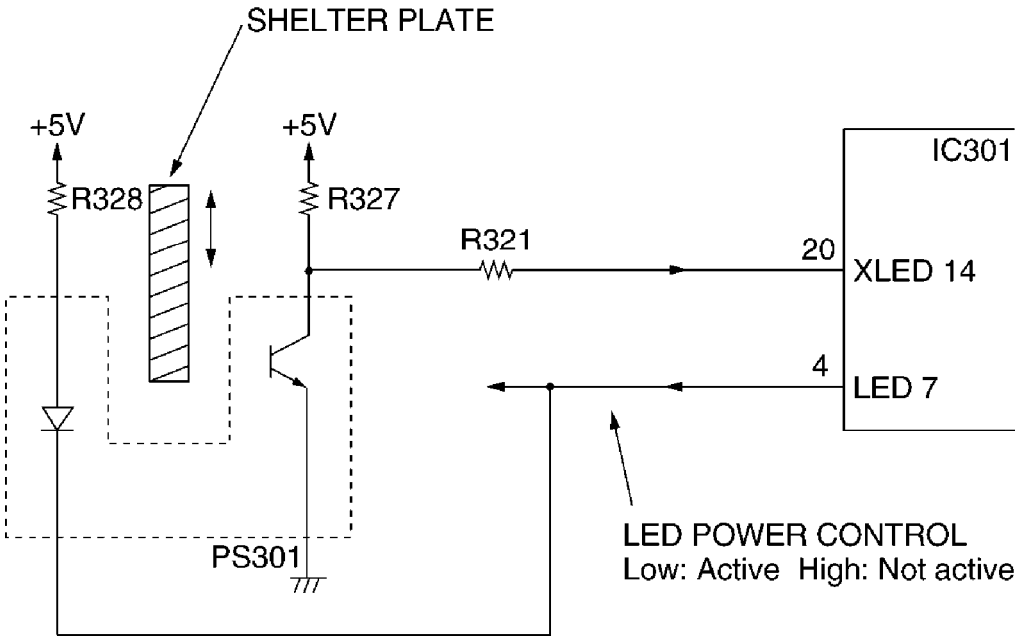

Operation Board

	Phototransistor	Signal (IC301-20 pin)
No document	ON	Low level
Set document	OFF	High level

3. [Cover Open Sensor (PS303)]

When the operation panel cover is closed, the shelter plate is lifted, the phototransistor becomes ON, and the input signal of IC301-20 pin (Operation) becomes a low level. When the cover is opened, the shelter plate shuts the sensor light, the phototransistor becomes OFF, and the input signal of IC301-20 pin

(Operation) becomes a high level.

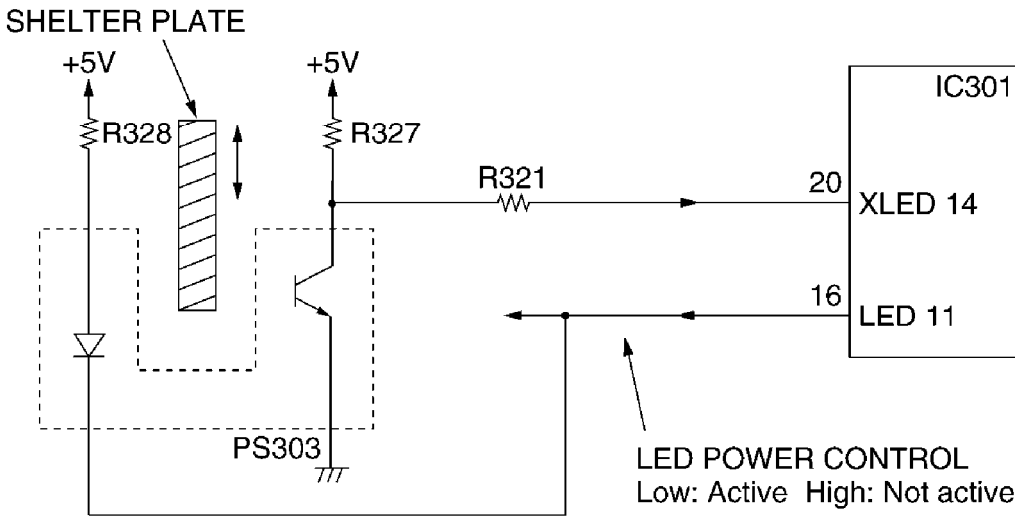

Operation Board

	Phototransistor	Signal (IC301-20 pin)
Open	OFF	High level
Closed	ON	Low level

4. [Hook Switch (SW401)]

When the handset is lifted, the switch turns ON, and the signal at pin 21 of IC301 becomes low.

When the handset is returned, the switch turns OFF, and the signal at pin 21 of IC301 becomes high.

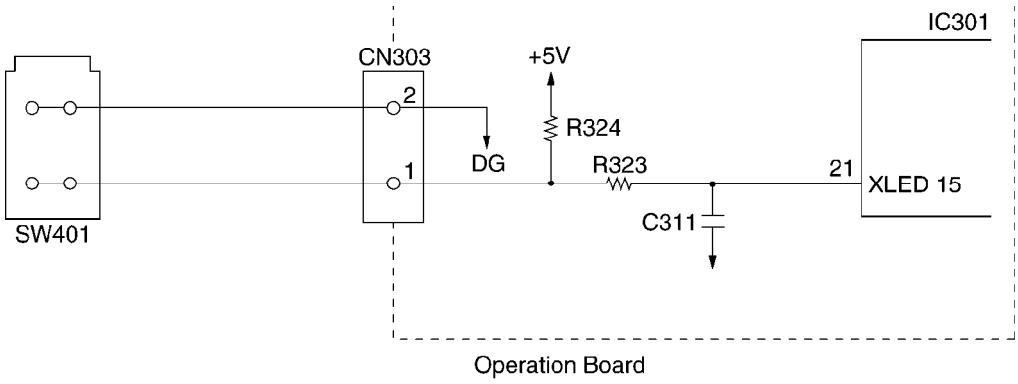

Operation Board

	SW	Signal (IC301-21 pin)
ON-Hook	OFF	High level
OFF-Hook	ON	Low level

5. [Paper top Sensor (PS502)]

When the recording paper is loaded on the print head, the shelter plate shuts the sensor light, and the phototransistor becomes OFF. The input signal of IC501-152 pin becomes a high level. Usually, the shelter plate is lifted, the phototransistor becomes ON, and the input signal of IC501-152 pin becomes a low level.

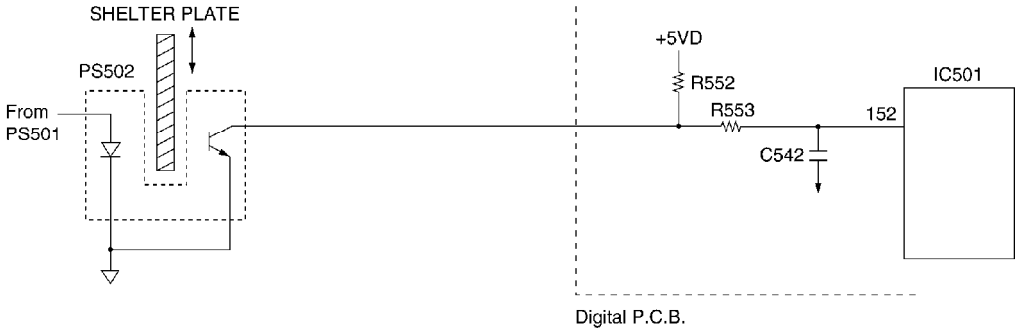

	Phototransistor	Signal (IC501-152 pin)
Set recording paper	OFF	High level
No recording paper	ON	Low level

6. [Film End Sensor (PS501)]

As the amount of the film decreases, the revolving speed of the rolled film becomes faster. When the film is used up, it comes off from the paper roll. The amount of the remaining film is measured by the revolving speed. When the film stops turning around, the sensor detects the film end.

The rotary encoder rotates slowly when the ink film is full (when printing), as shown in the diagram below. It rotates faster when it is near its end. Sensor PS501 converts the rotation of the rotary encoder into pulses and the amount of the remaining ink film is then calculated internally by the ASIC (IC501) and stored into memory. Then an error message such as "FILM EMPTY" or "FILM NEAR EMPTY" appears on the LCD display.

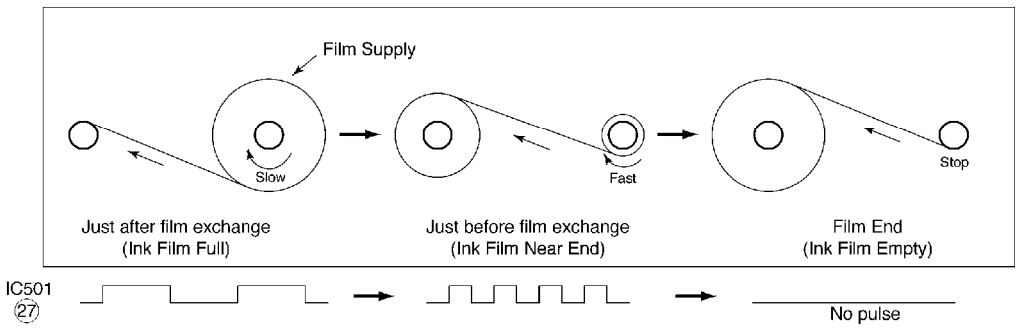

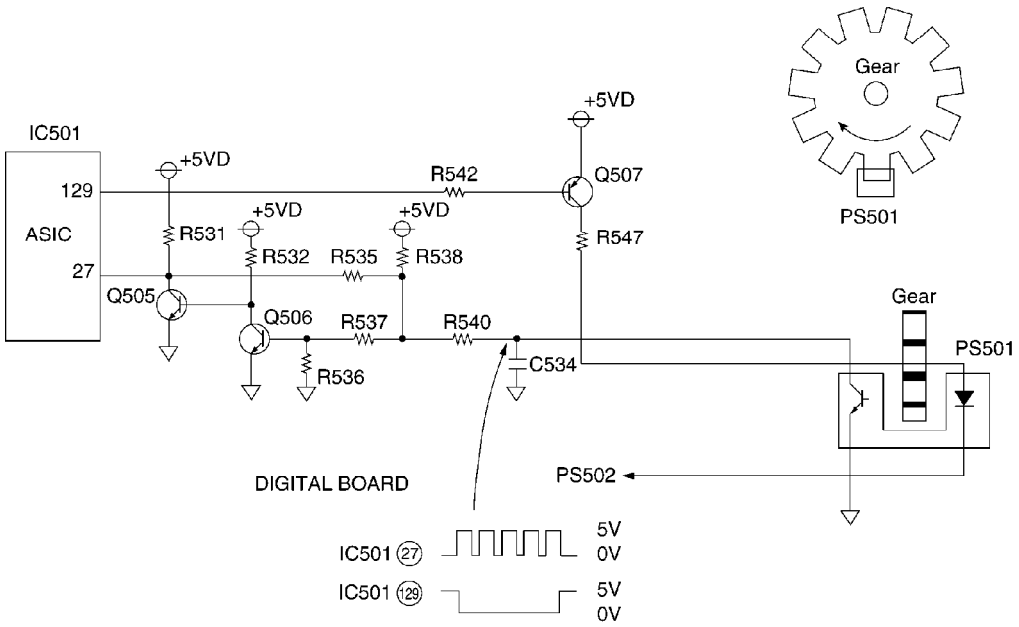

7. [Motor Position Sensor (Switch)]

This sensor is a detection switch for recording the position of the CAM.

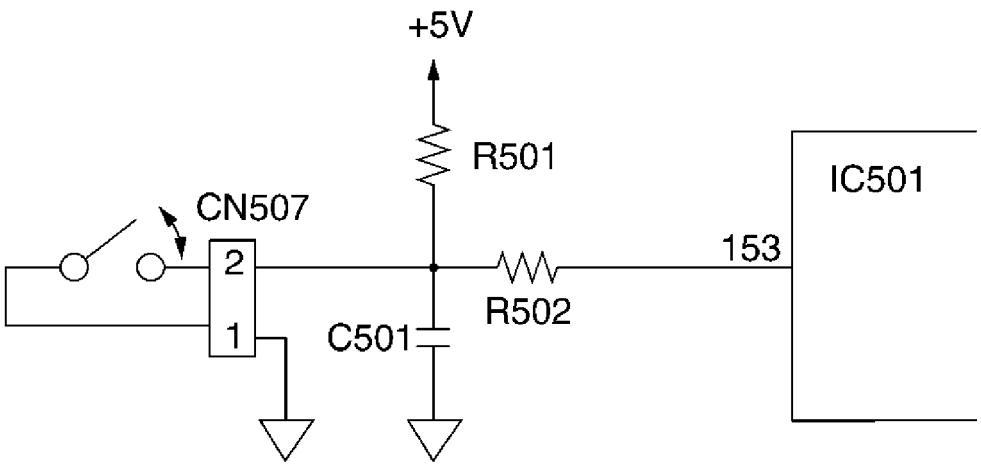

Digital Board

	Signal (IC501-153 pin)
Home position	Low level
Other	High level

6.6. MODEM SECTION

6.6.1. FUNCTION

The unit uses a 1 chip modem (IC505) that serves as an interface between the control section for FAX transmission and reception and the telephone line. During a transmitting operation, the digital image signals are modulated and sent to the telephone line.

During a receiving operation, the analog image signals which are received via the telephone line are demodulated and converted into digital image signals. The communication format and

procedures for FAX communication are standardized by CCITT. This 1 chip modem (IC505) has hardware which sends and detects all of the necessary signals for FAX communication.
It can be controlled by writing commands from the CPU (IC501: inside ASIC) to the register in the modem (IC505).
This modem (IC505) also sends DTMF signals, generates a call tone (from the speaker), and detects a busy tone and dial tones.
Overview of Facsimile Communication Procedures (CCITT Recommendation):

1. ON CCITT (International Telegraph and Telephone Consultative Committee)

The No. XIV Group of CCITT, one of the four permanent organizations of the International Telecommunications Union (ITU), investigates and make recommendations on international standards for facsimiles.

2. Definition of Each Group

- Group I (G1)
Official A-4 size documents without using formats which reduce the band width of a signal are sent over telephone lines. Determined in 1968.
Transmission for about 6 minutes at a scanning line density of 3.85 lines/mm.

- Group II (G2)
Using reduction technology in the modulation/demodulation format, an A-4 size document is sent at an official scanning line density of 3.85 lines/mm for about 3 minutes.
Methods to suppress redundancy are not used.
Determined in 1976.

- Group III (G3)
Method of suppressing redundancy in the image signal prior to modulation is used. An A-4 size document is sent within about one minute.
Determined in 1980.

- Group IV (G4)
Transmission is via the data network. A method is provided for suppressing redundancy in signals prior to transmission, and error-free reception of transmission is possible.
The scope of these facsimile applications is not limited simply to transmission of written statements. Through symbiotic

linkages with other communication methods, it can be expected to expand to include integrated services.

3. Facsimile Call Time Series

As shown in the following diagram, the facsimile call time series is divided into five phases.

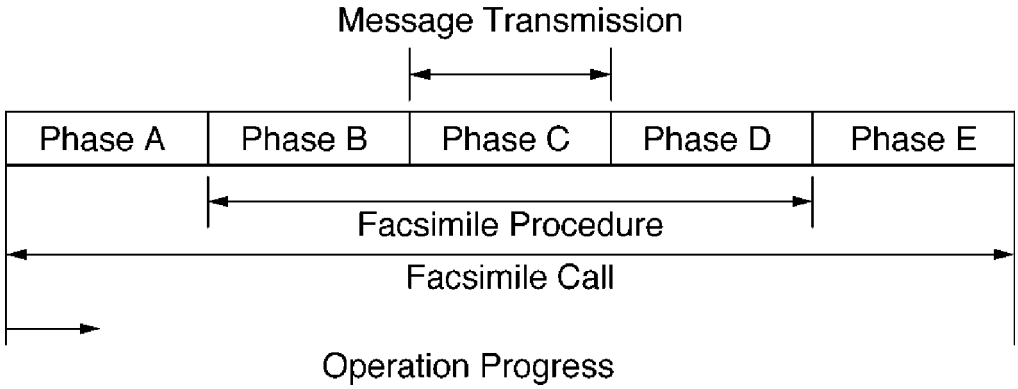

Phase A : Call setting

Call setting can be manual/automatic.

Phase B : Pre-message procedure

Phase B is a pre-processing procedure and sequence for confirming the status of the terminal, transmission route, etc., and for terminal control. It implements terminal preparation status, determines and displays terminal constants, confirms synchronization status, etc. and prepares for transmission of facsimile messages.

Phase C : Message transmission

Phase C is the procedure for the transmitting facsimile messages.

Phase D : Post message procedure

Phase D is the procedure for confirming that the message is completed and received. For continuous transmission, phase B or phase C is repeated for transmission.

Phase E : Call retrieval

Phase E is the procedure for call retrieval, that is for circuit disconnection.

4. Concerning Transmission Time

[Transmission Time] = [Control Time] + [Image Transmission Time] + [Hold Time]

Transmission time consists of the following.

Control time:
This is time at the start of transmission when the functions at the sending and receiving sides are confirmed, the transmission mode is established, and transmission and reception are synchronized.

Image transmission time:
This is the time required for the transmission of document contents (image data). In general, this time is recorded in the catalog, etc.

Hold time:
This is the time required after the document contents have been sent to confirm that the document was actually sent, and to check for telephone reservations and/or the existence of continuous transmission.

5. Facsimile Standards

Item	Telephone Network Facsimile G3 Machine
Connection Control Mode	Telephone Network Signal Mode
Terminal Control Mode	T. 30 Binary
Facsimile Signal Format	Digital
Modulation Mode	PSK (V. 27 ter) or QAM (V. 29)
Transmission Speed	300 bps (Control Signal) 2400, 4800, 7200, 9600, 12000, 14400 bps (FAX Signal)
Redundancy Compression Process (Coding Mode)	1 dimension : MH Mode 2 dimension : MR Mode (K=2.4)
Resolution	Main Scan : 8 pel/mm Sub Scan : 3.85, 7.7l/mm
Line Synchronization Signal	EOL Signal
1 Line Transmission Time [ms/line]	Depends on the degree of data reduction. Minimum Value : 10, 20 Can be recognized in 40ms.

6. Explanation of Communication and Compression Technology

A. G3 Communication Signals (T. 30 Binary Process)

For G3 Facsimile communication, this is the procedure for exchanging control signals between the sending and receiving

machines both before and after transmission of image signals. Control signals at 300 bps FSK are: 1850 Hz...0, 1650Hz...1. / An example of a binary process in G3 communication is shown below.

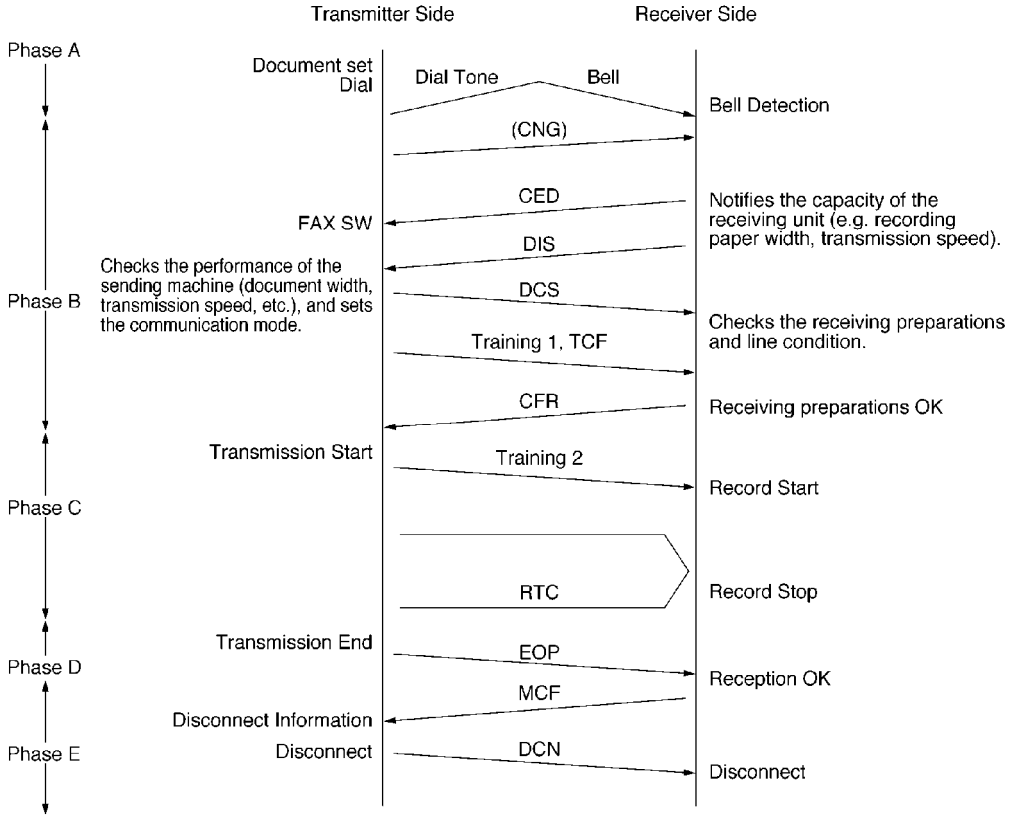

Explanation of Signals

Control signals are comprised mainly of 8-bit identification signals and the data signals added to them. Data signals are added to DIS and DCS signals.

Signal.....DIS (Digital Identification Signal) / Identification Signal

Format.....00000001

Function: / Notifies the capacity of the receiving unit. The added data signals are as follows.

Signal.....DCS (Digital Command Signal) / Identification Signal

Format.....X1000001

Example (Some models do not support the following items.):

Bit No.	DIS/DTC	DCS
1	Transmitter --- T.2 operation	
2	Receiver --- T.2 operation	Receiver --- T.2 operation
3	T.2 IOC = 176	T.2 IOC = 176
4	Transmitter --- T.3 operation	
5	Receiver --- T.3 operation	Receiver --- T.3 operation
6	Reserved for future T.3 operation features	
7	Reserved for future T.3 operation features.	
8	Reserved for future T.3 operation features.	
9	Transmitter --- T.4 operation	
10	Receiver --- T.4 operation	Receiver --- T.4 operation
11, 12, 13, 14	Data signaling rate	Data signaling rate
0, 0, 0, 0	V.27 ter fall back mode	2400 bit/s, V.27 ter
0, 1, 0, 0	V.27 ter	4800 bit/s, V.27 ter
1, 0, 0, 0	V.29	9600 bit/s, V.29
1, 1, 0, 0	V.27 ter and V.29	7200 bit/s, V.29
0, 0, 1, 0	Not used	14400 bit/s, V.33
0, 1, 1, 0	Reserved	12000 bit/s, V.33
1, 0, 1, 0	Not used	Reserved
1, 1, 1, 0	V.27 ter and V.29 and V.33	Reserved
0, 0, 0, 1	Not used	14400 bit/s, V.17
0, 1, 0, 1	Reserved	12000 bit/s, V.17
1, 0, 0, 1	Not used	9600 bit/s, V.17
1, 1, 0, 1	V.27 ter and V.29 and V.33 and V.17	7200 bit/s, V.17
0, 0, 1, 1	Not used	Reserved
0, 1, 1, 1	Reserved	Reserved
1, 0, 1, 1	Not used	Reserved
1, 1, 1, 1	Reserved	Reserved
15	R8×7.7 lines/mm and/or 200×200 pels/ 25.4mm	R8×7.7 lines/mm and/or 200×200 p 25.4mm
16	Two-dimensional coding capability	Two-dimensional coding capability

Bit No.	DIS/DTC	DCS
17, 18	Recording width capabilities	Recording width
(0, 0)	1728 picture elements along scan line length of 215 mm ± 1%	1728 picture elements along scan l length of 215 mm ± 1%
(0, 1)	1728 picture elements along scan line length of 215 mm ± 1% 2048 picture elements along scan line length of 255 mm ± 1%	2432 picture elements along scan l length of 303 mm ± 1%
(1, 0)	2432 picture elements along scan line length of 303 mm ± 1%	2048 picture elements along scan l length of 255 mm ± 1%
(1, 1)	1728 picture elements along scan line length of 215 mm ± 1% 2048 picture elements along scan line length of 255 mm ± 1% Invalid	Invalid
19, 20	Maximum recording length capability	Maximum recording length
(0, 0)	A4 (297 mm)	A4 (297 mm)
(0, 1)	Unlimited	Unlimited
(1, 0)	A4 (297 mm) and B4 (364 mm)	B4 (364 mm)
(1, 1)	Invalid	Invalid
21, 22, 23	Minimum scan line time capability of the receiver	Minimum scan line time
(0, 0, 0)	20 ms at 3.85 l/mm: $T_{7.7} = T_{3.85}$	20 ms
(0, 0, 1)	40 ms at 3.85 l/mm: $T_{7.7} = T_{3.85}$	40 ms
(0, 1, 0)	10 ms at 3.85 l/mm: $T_{7.7} = T_{3.85}$	10 ms
(1, 0, 0)	5 ms at 3.85 l/mm: $T_{7.7} = T_{3.85}$	5 ms
(0, 1, 1)	10 ms at 3.85 l/mm: $T_{7.7} = 1/2\ T_{3.85}$	
(1, 1, 0)	20 ms at 3.85 l/mm: $T_{7.7} = 1/2\ T_{3.85}$	
(1, 0, 1)	40 ms at 3.85 l/mm: $T_{7.7} = 1/2\ T_{3.85}$	
(1, 1, 1)	0 ms at 3.85 l/mm: $T_{7.7} = T_{3.85}$	0 ms
24	Extend field	Extend field
25	2400 bit/s handshaking	2400 bit/s handshaking
26	Uncompressed mode	Uncompressed mode
27	Error correction mode	Error correction mode
28	Set to "0".	Frame size 0 = 256 octets 1 = 64 oc
29	Error limiting mode	Error limiting mode
30	Reserved for G4 capability on PSTN	Reserved for G4 capability on PST
31	T.6 coding capability	T.6 coding enabled
32	Extend field	Extend field

Bit No.	DIS/DTC	DCS
33 (0) (1)	Validity of bits 17, 18 Bits 17, 18 are valid Bits 17, 18 are invalid	Recording width Recording width indicated by bits Recording width indicated by this information
34	Recording width capability 1216 picture elements along scan line length of 151 ± mm 1%	Middle 1216 elements of 1728 pictu elements
35	Recording width capability 864 picture elements along scan line length of 107 ± mm 1%	Middle 864 elements of 1728 pictur elements
36	Recording width capability 1728 picture elements along scan line length of 151 ± mm 1%	Invalid
37	Recording width capability 1728 picture elements along scan line length of 107 ± mm 1%	Invalid
38	Reserved for future recording width capability.	
39	Reserved for future recording width capability.	
40	Extend field	Extend field
41	R8×15.4 lines/mm	R8×15.4 lines/mm
42	300×300 pels/25.4 mm	300×300 pels/25.4 mm
43	R16×15.4 lines/mm and/or 400×400 pels/25.4 mm	R16×15.4 lines/mm and/or 400×400 25.4 mm
44	Inch based resolution preferred	Resolution type selection "0" : neritic based resolution "1" : inch based resolution
45	Metric based resolution preferred	Don't care
46	Minimum scan line time capability for higher resolutions "0" : $T_{15.4} = T_{7.7}$ "1" : $T_{15.4} = 1/2T_{7.7}$	Don't care
47	Selective Polling capability	Set to "0".
48	Extend field	Extend field

Note 1 - Standard facsimile units conforming to T.2 must have the following capability : Index of cooperation (IOC)=264.
Note 2 - Standard facsimile units conforming to T.3 must have the following capability : Index of cooperation (IOC)=264.
Note 1 - Standard facsimile units conforming to T.4 must have the following capability : Paper length=297 mm.

Signal	Identification Signal Format	Function
Training 1	————————	A fixed pattern is transmitted to the receiving at a speed (2400 to 9600 bps) designated by D and the receiving side optimizes the automati equalizer, etc., according to this signal.
TCF (Training Check)	————————	Sends 0 continuously for 1.5 seconds at the s speed as the training signal.
CFR (Confirmation to Receive)	X0100001	Notifies the sending side that TCF has been properly received. If TCF is not properly recei FTT (Failure To Train) X0100010 is relayed to sender. The sender then reduces the transmi speed by one stage and initiates training onc again.
Training 2	————————	Used for reconfirming the receiving side like training 1.
Image Signal	Refer to the next page.	————————
RTC (Return to Control)	————————	Sends 12 bits (0...01 × 6 times) to the receiver the same speed as the image signal and notif completion of transmission of the first sheet.
EOP (End of Procedure)	X1110100	End of one communication
MCF (Message Confirmation)	X0110001	End of 1 page reception
DCN (Disconnect)	X1011111	Phase E starts.
MPS (Multi-Page Signal)	X1110010	Completion of transmission of 1 page. If there still more documents to be sent, they are outp instead of EOP. After MCF reception, the send transmits an image signal of the second shee
PRI-EOP (Procedural Interrupt-EOP)	X1111100	If there is an operator call from the sender, it output after RTC.
PIP (Procedural Interrupt Positive)	X0110101	This is output when an operator call is receiv

B. Redundancy Compression Process Coding Mode / This unit uses one-dimensional MH format.

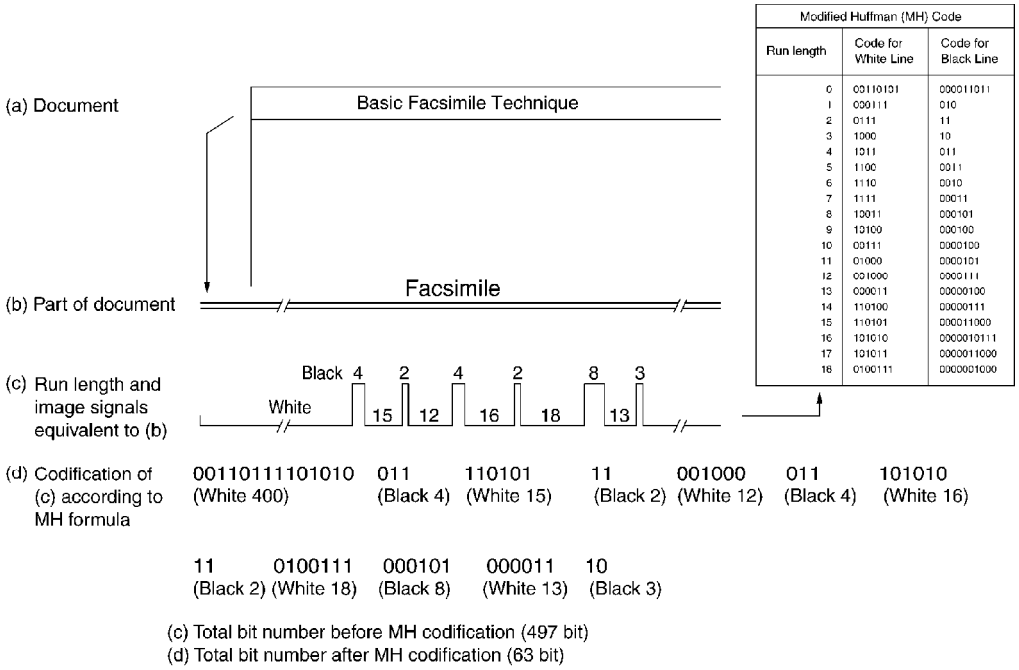

Modified Huffman (MH) Code

Run length	Code for White Line	Code for Black Line
0	00110101	0000110111
1	000111	010
2	0111	11
3	1000	10
4	1011	011
5	1100	0011
6	1110	0010
7	1111	00011
8	10011	000101
9	10100	000100
10	00111	0000100
11	01000	0000101
12	001000	0000111
13	000011	00000100
14	110100	00000111
15	110101	000011000
16	101010	0000010111
17	101011	0000011000
18	0100111	0000001000

6.6.2. MODEM CIRCUIT OPERATION

The modem (IC505) has all the hardware satisfying the CCITT standards mentioned previously. When the ASIC IC501 (77) is brought to a low level, the modem (IC505) is chip-selected and the resistors inside IC are selected by the select signals from ASIC (IC501) ADR0-ADR4(pin 107~111). Commands are written through the data bus, and all processing is controlled by the ASIC (IC501) according to CCITT procedures. Here, the $\overline{INT}$ signal dispatched from $\overline{IRQ}$ (pin 52 of IC505) to the ASIC (IC501) implements post processing.

This modem (IC505) has an automatic application equalizer. With training signal 1 or 2 at the time of G3 reception, it can automatically establish the optimum equalizer. The modem (IC505) clock is supplied by pin 70 of ASIC (IC501).

1. Facsimile Transmission/DTMF Line Send

The digital image data on the data bus is modulated in the modem (IC505), and sent from pin 44 via amplifier IC511 (24 → 25), and the NCU section to the telephone line.

Refer to 2.3.3.5. Analog Board Section.

2. Facsimile Reception

The analog image data which is received from the telephone line passes through the NCU section and enters pin 45 of the modem (IC505). The signals that enter pin 45 of the modem (IC505) are demodulated in the board to digital image signals, then placed on the data bus.

In this case, the image signals from the telephone line are transmitted serially. Hence, they are placed on the bus in 8 bit

units. Here, the internal equalizer circuit reduces the image signals to a long-distance receiving level.
This is designed to correct the characteristics of the frequency band centered around 3 kHz and maintain a constant receiving sensitivity.
It can be set in the service mode.
Refer to 2.3.3.5. Analog Board Section.

3. DTMF Transmission (Monitor tone)
The DTMF signal generated in the modem (IC505) is output from pin 44, and the NCU section to the telephone line the same as facsimile transmission signals.
(DTMF Monitor Tone)
Refer to 2.3.3.5. Analog Board Section.

4. Busy/Dial Tone Detection
The path is the same as FAX receiving. When it is detected, the carrier detect bit of the resistor in the modem (IC505) becomes 1, and this status is monitored by ASIC (IC501).

6.7. DESCRIPTION OF BLOCK DIAGRAM IN ANALOG SECTION

1. Function
The analog section is composed of the following circuits.
A. Interface circuit to connect with telephone line (NCU)
B. Analog gate array (IC511)

- To change the circuit configuration for Tx/Rx signals of handset, and fax signals.

Following is the detailed description of each circuit.

[NCU]:Network Control Unit
The NCU comprises of the following; DC loop forming circuit to connect with the telephone line; Switching circuit for other interconnected telephones; Bell detection circuit; Pulse dial generation circuit; Extension phone line off-hook detection circuit; Sidetone circuit; Remote fax activation circuit. Refer to 6.8. NCU SECTION for the details.

[Analog gate array (IC511)]
The cross-point switch installed in this IC makes it possible to change the circuit configuration for any analog signals such as the fax signals sent from the digital MODEM board. In addition, this analog gate array integrates a handset circuit, input/output ports, etc. This IC is controlled by ASIC (IC501) on the digital board.

6.7.1. ANALOG UNIT BLOCK DIAGRAM

6.8. NCU SECTION

6.8.1. GENERAL

This section is the interface between the telephone line and external telephone. It is composed of an EXT. TEL line relay (RL101), bell detection circuit, pulse dial circuit, TAM interface circuit, line amplifier and sidetone circuits and a multiplexer.

6.8.2. EXT. TEL. LINE RELAY (RL101)

1. Circuit Operation

Normally, this relay switches to the external telephone side (break) and switches to the open side (make) while OFF-HOOK.
{ IC501 (58) High Level → CN501 (6) High Level } → CN101 (6) High Level → Q108 ON → RL101 (make)

6.8.3. BELL DETECTION CIRCUIT

1. Circuit Operation

The signal waveform for each point is indicated below. The signal (low level section) input to pin 63 of ASIC IC501 on the digital board is read by ASIC and judged as a bell.
TEL LINE → PC103 (1, 2 - 4) → IC501 (63)

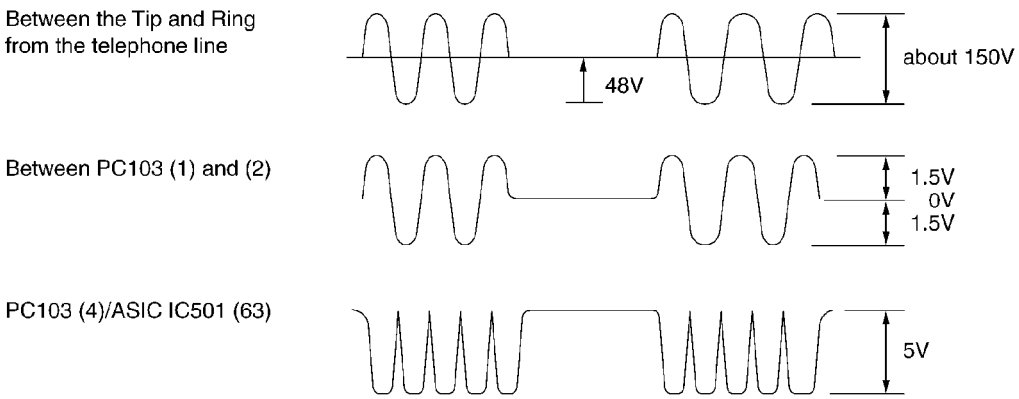

6.8.4. TAM INTERFACE CIRCUIT

This circuit is to switch between FAX receiving and the external TAM's message recording automatically. This circuit consists of an EXT. TAM OFF-HOOK detect circuit, monitor transformer, multiplexer, amplifier, and VOX detect circuit.
For details, please refer to 6.10. TAM INTERFACE SECTION.

6.8.5. LINE AMPLIFIER AND SIDE TONE CIRCUIT

1. Circuit Operation

The reception signal output from the line transformer T101 is input

to pin (6) of IC101 via C126 and R131, and then the signal is amplified at pin (7) of IC101 and sent to the reception system at 11.6dB.

The transmission signal goes through C131 and R137 and enters IC101-pin (2), where the signal is amplified to about 7.4dB. Then, it is output from pin (1) of IC101 and transmitted to T101 via C133 and R125. If the side tone circuit is not applied, the transmission signal will return to the reception amplifier via C126 and R131. When the side tone circuit is active, the signal output from IC101 pin (1) passes through C133, R128, R129, C124, C123 and R127 and goes into the amplifier IC101 pin (5). This circuit is used to cancel the transmission return signal.

Side Tone Circuit

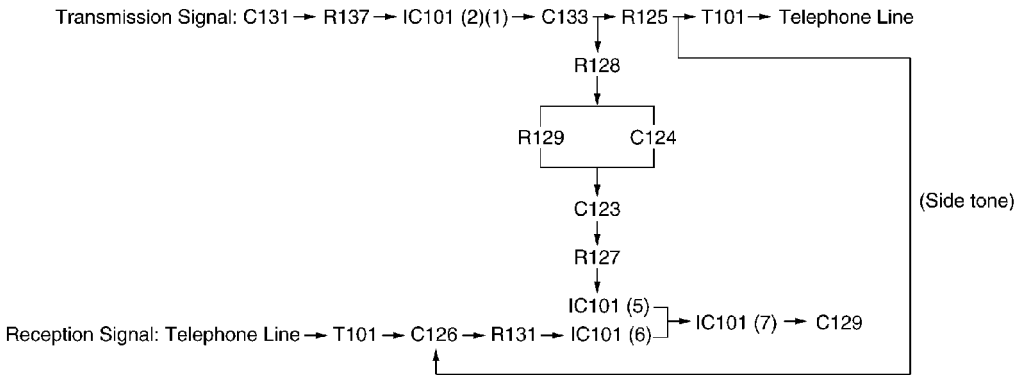

6.8.6. CALLING LINE IDENTIFICATION CIRCUIT

1. Function

This unit is compatible with the Caller ID service offered by your local telephone company. To use this feature, you must subscribe to a Caller ID service. The data for the caller ID from the telephone exchange is sent during the interval between the first and second rings of the bell signal. The data from the telephone exchange is a modem signal which is modulated in an FSK (Frequency Shift Keying) format. Data "0" is a 1200 Hz sine wave, and data 1 a 2200 Hz sine wave. / There are two type of the message format which can be received:i.e.the single data message format and multiple data message format. / The multiple data format allows to transmit the name and data code information in addition to the time and telephone number data. / When there is multiple data in the unit, the name or telephone number are displayed.

2. Circuit Operation:

The caller ID signal input from TEL LINE is processed with MODEM (IC505). / Refer to 2.3.3.5. Analog Board Section for the route of caller ID signal.

Timing Chart

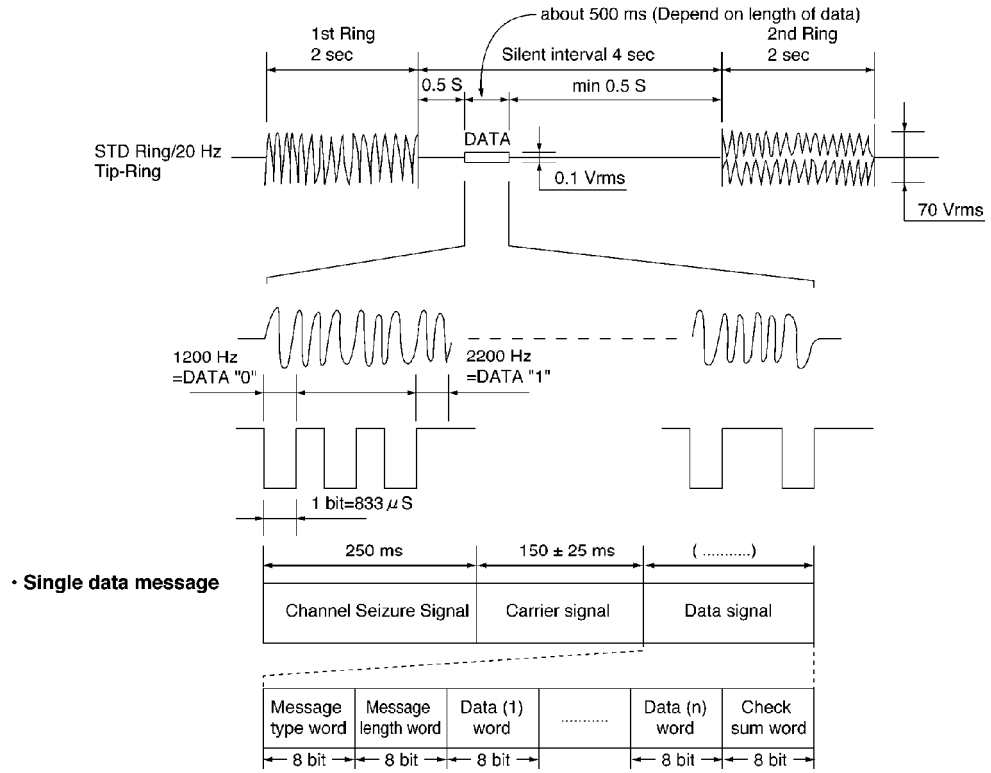

•1 word = All 8 bit data
•Message Type Word = Fixed value "00000100"
•Message Length Word = number of the data word
•Data word = The data value (month, day, hour, minute, telephone number)

• **Multiple data message**

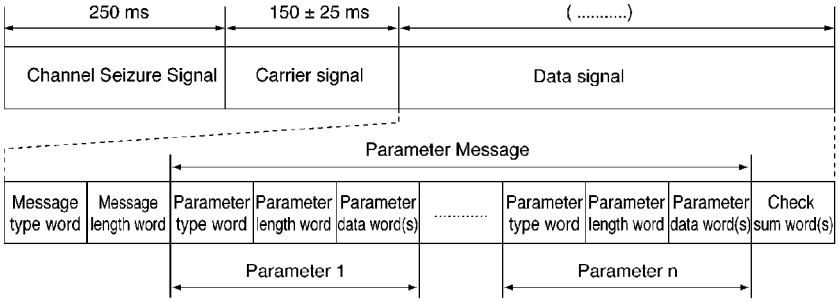

•1 word = All 8 bit data
•Message Type = Fixed value "10000000"
•Message Length Word = number of the Parameter Message word
•Parameter Type Word = Kind of data (ex. the time, phone number)
•Parameter Length Word = number of the Parameter data word
•Parameter Word (s) = the data value

6.9. ITS (Integrated telephone System) and MONITOR SECTION

6.9.1. GENERAL

The general ITS operation is performed by the special IC511 which has a handset circuit. The alarm tone, the key tone, and the beep are output from the ASIC IC501 (digital board). During the pulse dial operation, the monitor tone is output from the ASIC IC501.

6.9.2. TELEPHONE MONITOR

1. Function

This is the function when you are not holding the handset and can hear the caller's voice from the line.

2. Signal path

Refer to 2.3.3.5. Analog Board Section.

6.9.3. HANDSET CIRCUIT

1. Function

This circuit controls the conversation over the handset, i.e. the transmitted and received voices to and from the handset.

2. Signal path (Transmission signal)

Refer to 2.3.3.5. Analog Board Section.

3. Signal path (Reception signal)

Refer to 2.3.3.5. Analog Board Section.

6.9.4. MONITOR CIRCUIT

1. Function

This circuit monitors various tones, such as ① DTMF tone, ② Alarm/Beep/Key tone/Bell ③ Dummy ring back tone.

2. Signal path

A. DTMF MONITOR

(Speaker Operation)

Refer to 2.3.3.5. Analog Board Section.

(Handset Operation)

Refer to 2.3.3.5. Analog Board Section.

B. ALARM/BEEP/KEY TONE/BELL

Refer to 2.3.3.5. Analog Board Section.

C. DUMMY RING BACK TONE

Refer to 2.3.3.5. Analog Board Section.

6.10. TAM INTERFACE SECTION

6.10.1. FUNCTION

If EXT. TAM is selected in the Receive mode, the unit receives documents for FAX calls or the external TAM records a voice message automatically.
To switch between the answering machine and facsimile in the EXT. TAM Mode.

#	EXTERNAL TAM OPERATION	UNIT OPERATION
1	When the bell signal rings as many times as the number memorized into the connected answering machine (TAM), the answering machine is connected to the line and the answering message is sent out to the line. (OGM out for 8 ~ 16 sec.)	The length of the answering message should be 8~16 seconds. While the message is being played, the unit starts to detect the CNG signal.(Ⓐ) If the unit detects the CNG signal, it will switch to FAX receiving and disconnect the external TAM automatically.

#	EXTERNAL TAM OPERATION	UNIT OPERATION
2	After sending the OGM, the answering machine starts to record the message of the other party (ICM recording).	After the OGM of the external TAM is finished, the unit starts to detect approximately 5 seconds of no sound detection. (Ⓑ) If no sound is detected, the unit will switch to FAX receiving and disconnect the external TAM automatically. If the unit cannot detect the CNG signal or no sound for about 30 seconds, the unit will disconnect the line. (Ⓒ)

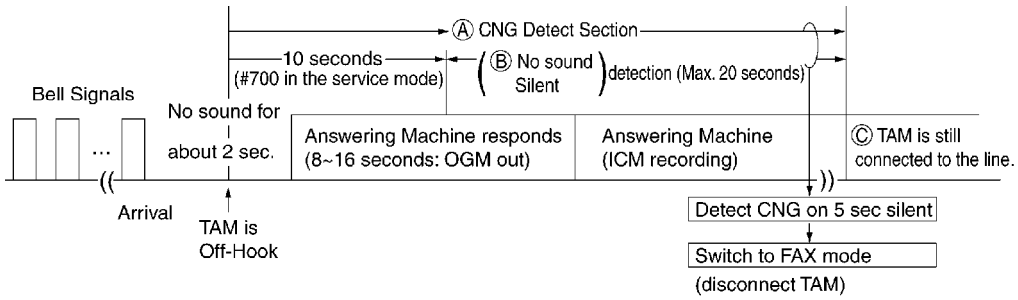

Attention 1:
No sound detection lasts 20 seconds after the telephone call is received at the answering machine. If there is no sound for more than 5 seconds (#701 in the service mode), it switches to the facsimile.

Attention 2:
When the answering machine cannot answer the telephone call because of disconnection or the recording tape is full, the unit picks up the call after 5 rings (#702 in the service mode). Then it switches to the facsimile.

6.10.2. CIRCUIT OPERATION

The TAM INTERFACE circuit consists of an EXT. TAM HOOK detection circuit, CNG signal from the other party's detection circuit, VOX detection circuit (to judge sound/no-sound) and RL101 (to separate EXT. TAM).

1. EXT. TAM HOOK detection circuit

A bell is received at EXT. TAM and EXT. TAM is connected to the line, making a DC LOOP. Then, PC105 detects this voltage. During detection, PC105 (4) becomes low.

(DC LOOP)

Tip → L101 → LF101(4, 1) → L104 → Tip1 → (EXT.TAM) → Ring 1

→ L105 → R113 → RL101(5, 3) → PC105(1, 2) → LF101(2, 3) → L102 → POS101 → Ring

2. CNG signal detection circuit
   The CNG signal from the other party's FAX is detected in MODEM IC505 (digital board).
   (Signal path)
   Refer to 2.3.3.5. Analog Board Section.

3. VOX
   The VOX circuit detects if there is a signal or voice on the line. This is why the VOX circuit reacts to the OGM of the EXT.TAM and ICM from the other party.

(Signal path)
Telephone Line ——→ C112 → T102 → CN101(9) → {CN501(9) → C596 → R595 → IC511(20, 21) → C610 →
EXT.TEL Line → R113 ↑
R613 → Q513(B, C) → C581 → R582 → IC511(7, 5) → IC501(36)}

4. Remote receiving
   This is the parallel-connected DTMF signal for the TEL or EXT.TEL mode between T and R. When the other party is a FAX, the unit switches to FAX receiving.
   (Signal Path)
   Detects the DTMF signal in the MODEM.

{ } : Inside the digital board

6.11. OPERATION BOARD SECTION

The unit consists of a LCD (Liquid crystal display), KEYs and LEDs (light-emitting diodes). They are controlled by the Gate Array (IC301) and ASIC (IC501: on the DIGITAL BOARD). (Fig.-a) / The key matrix table is shown below.

Fig-a

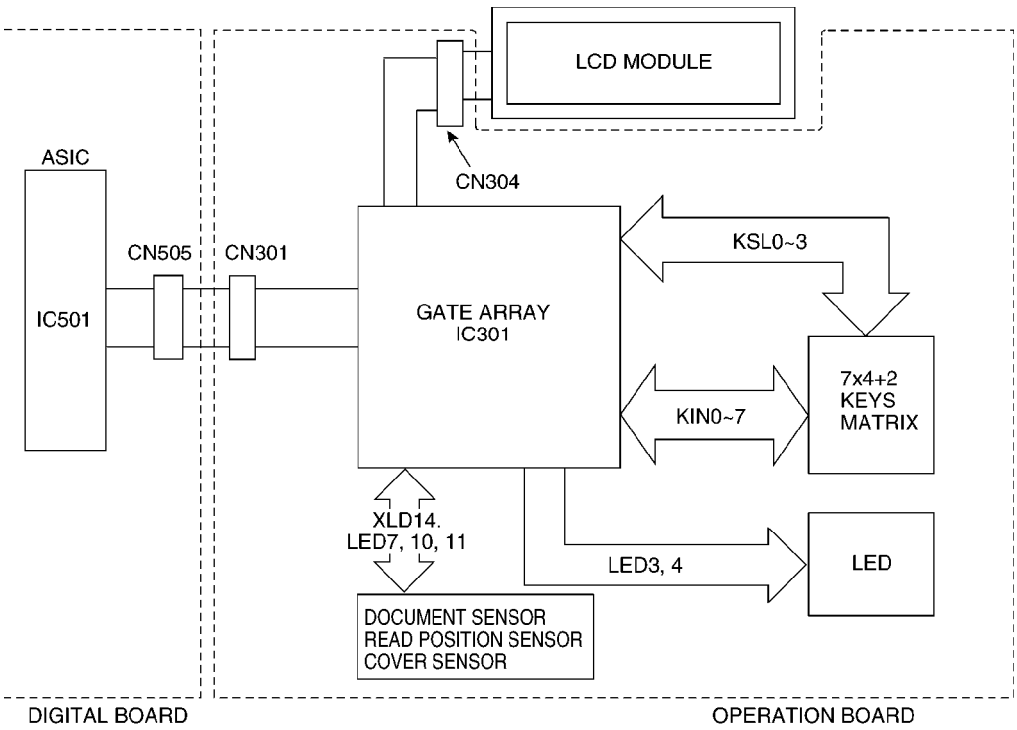

Key Matrix

	KIN0	KIN1	KIN2	KIN3	KIN4	KIN5	KIN6	KIN7
KSL0	SW301 *	SW305 START/SET/COPY	SW309 REDIAL/PAUSE	SW313 MUTE	SW317 9	SW321 PROGRAM	SW325 ONE 3, 6	SW329 IQ FAX
KSL1	SW302 VOL DOWN	SW306 STOP	SW310 6	SW314 3	SW318 8	SW322 MENU	SW326 LOWER	
KSL2	SW303 VOL UP	SW307 SP-PHONE	SW311 5	SW315 2	SW319 0	SW323 RESOLUTION	SW327 ONE 2, 5	SW331 CALLER ID
KSL3	SW304 HELP	SW308 #	SW312 4	SW316 1	SW320 7	SW324 QUICK SCAN	SW328 ONE 1, 4	SW332 AUTO ANSWER

	LED5	LED6
XLD12		
XLD13		

SENSOR

	LED7	LED10	LED11
XLD14	PS301 DOCUMENT SET	PS302 DOCUMENT TOP	PS303 COVER OPEN=1

LED

	LED2	LED3	LED4	LED8
		LED303 FAX ON	LED301 MONITOR	

6.12. LCD SECTION

The Gate Array (IC301) works only for writing the ASCII code from the data bus (D4~D7). V0 is supplied for the crystal drive.
R326 and R322 are density control resistors.
Consequently, in this unit, the timing (positive clock) is generated by the LCD interface circuitry in the gate array (IC301).

Circuit Diagram

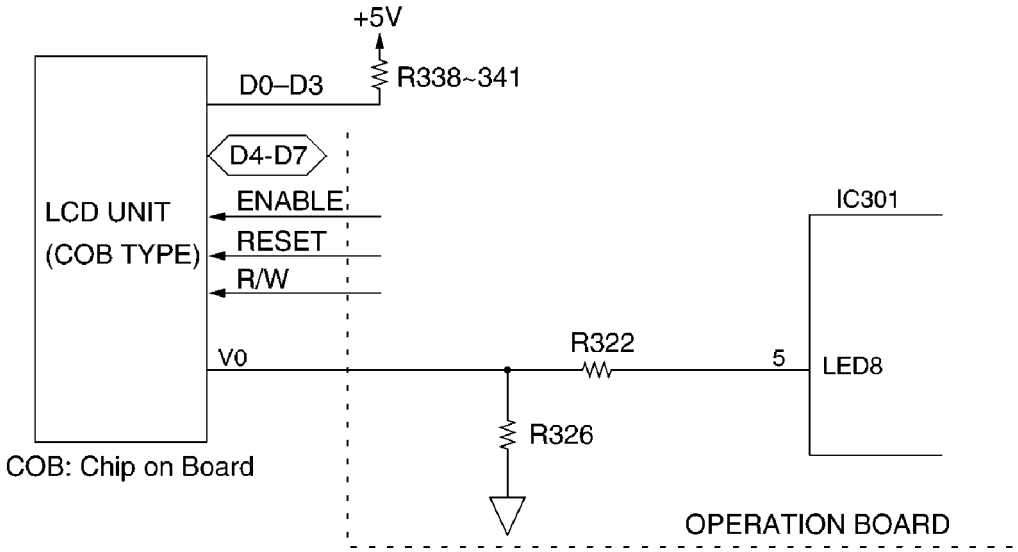

Timing Chart

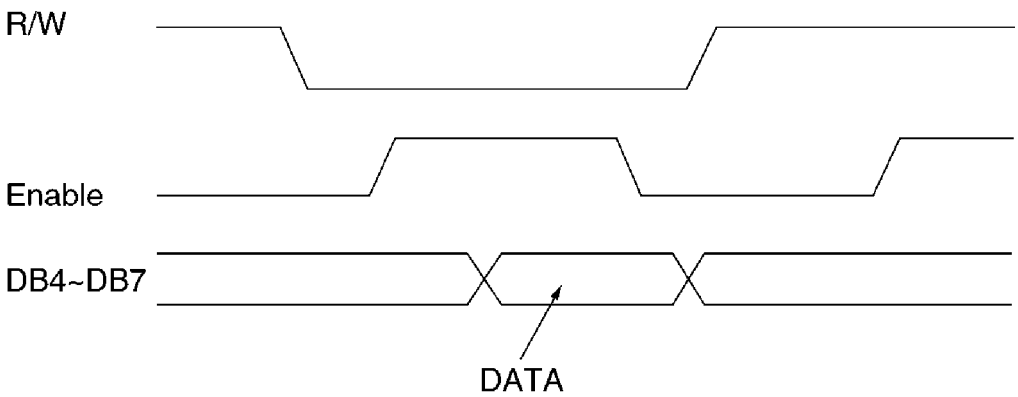

Density	Normal	Dark
LED8 (IC301-5pin)	H	L

6.13. POWER SUPPLY BOARD SECTION

This power supply board uses the switching regulator method.

Block Diagram

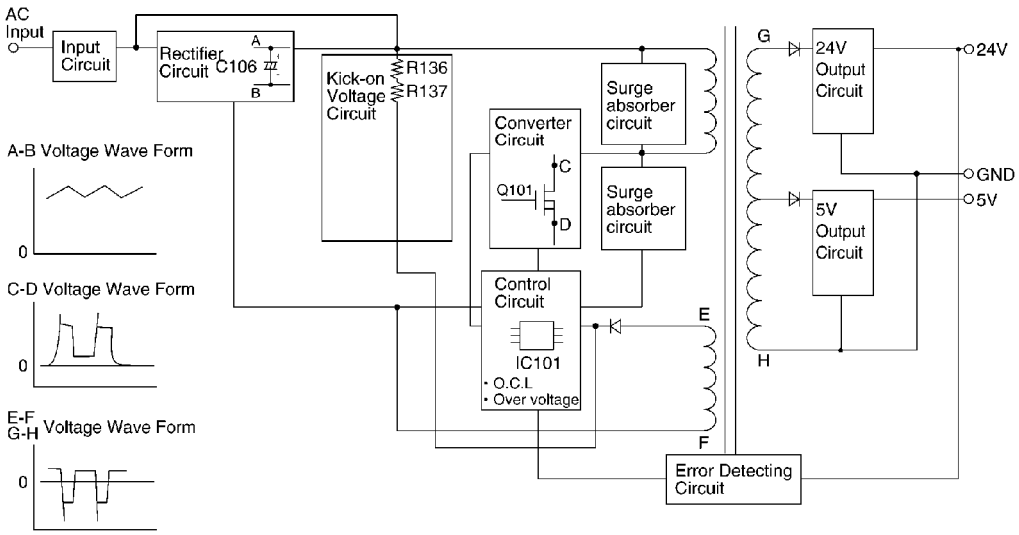

[Input Circuit]

The input current goes into the input rectifier circuit through the filter circuit. The filter circuit decreases the noise voltage and the noise electric field strength.

[Rectifier Circuit]

The input current is rectified by D101,D102,D103 and D104 and charges C106 to make DC voltage. Then it supplies power to the converter circuit.

[Kick-on voltage circuit]

Bias is applied to the Q101 gate via this circuit when the AC power is turned on and Q101 begins operating.

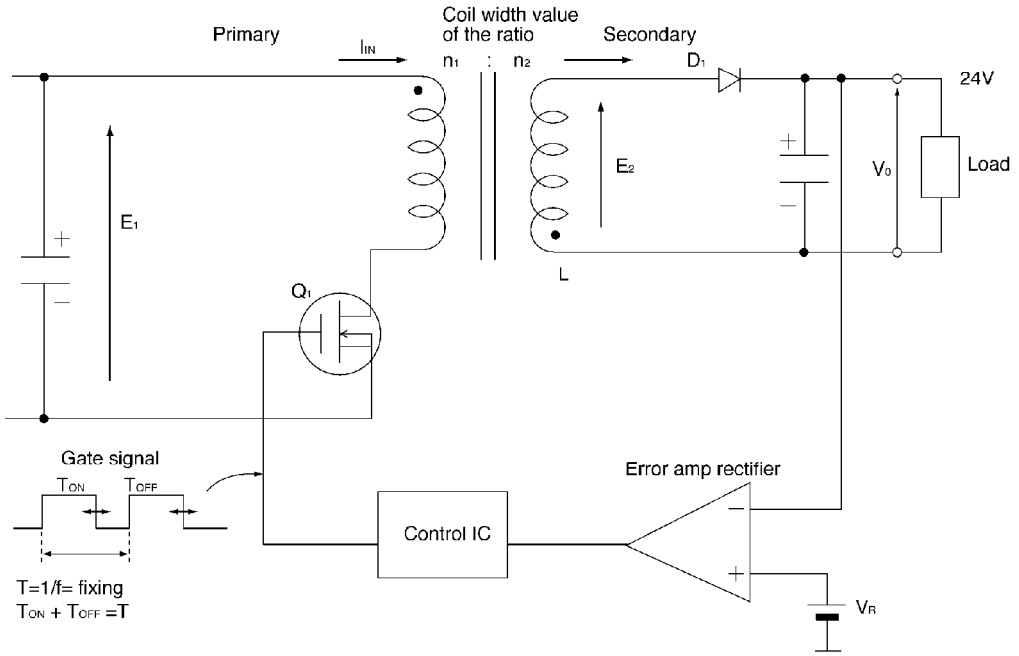

The following is an overview of how the power supply unit is controlled.

The control method of this power supply unit is pulse width modulation.

When Q_1 is ON, the energy is charged in the transfer primary coil according to E_1. When Q_1 is OFF, the energy is output from the secondary transfer as follows.

L → D_1 → Load → L

Then the power is supplied to the Load. When Q_1 is ON, power is not output from the secondary side. The output voltage is fed back in the control IC according to the error amp rectifier. Then depending on how T_{ON} is controlled, stabilization occurs. Also, when the current load becomes too large, in order to decrease the voltage output, the increase in τ is controlled and the output voltage is stabilized.

Therefore, basically the timing: Ton/Toff of Q1 controls the output voltage.

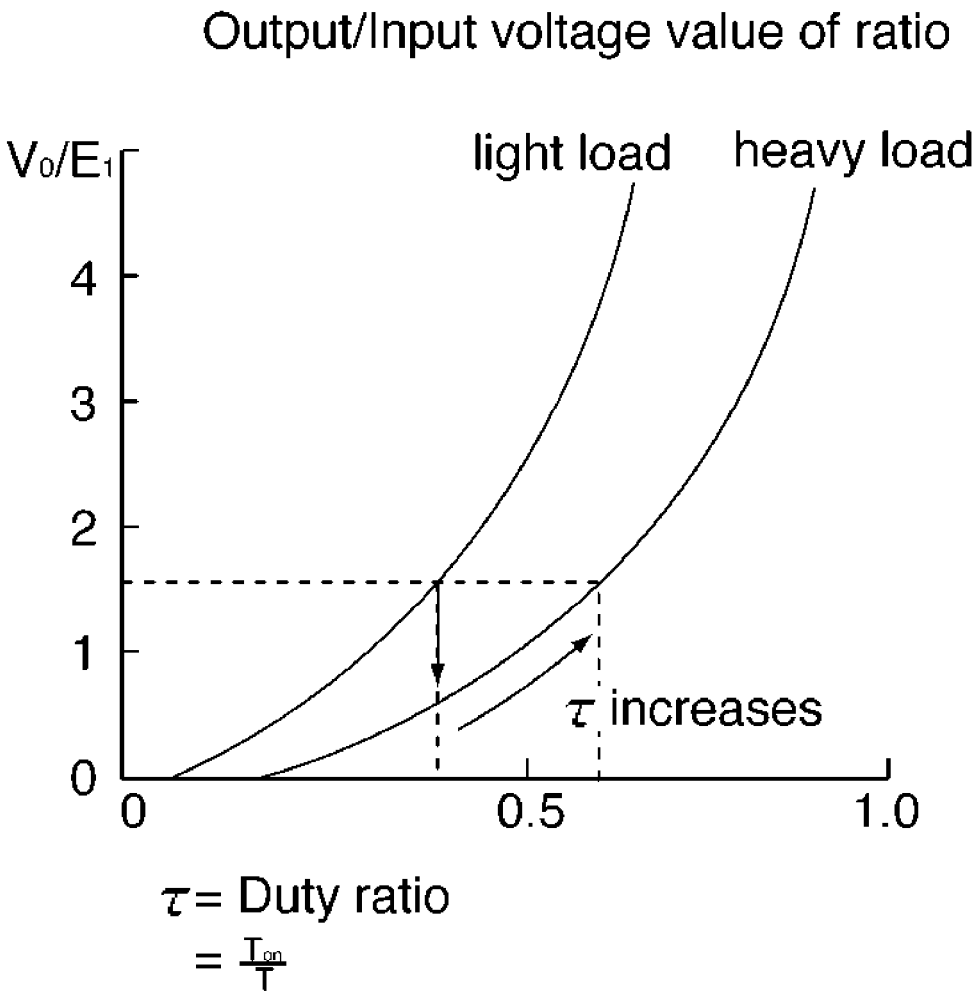

[Surge Absorber Circuit]

This circuit is for absorbing surge voltage generated by the transformer.

[Control Circuit and Detecting Circuit]

The control circuit amplifies the output with increased voltage detected in the error detecting circuit. Then it drives the main transistor.

In this power supply, the duty ratio is defined by changing the ON period of the main transistor. This is shown as follows.

When the output voltage of the 24V circuit increases, the current of the photo coupler PC101 increases, the pulse width of the output control IC becomes narrower and the ON period of Q101 becomes shorter.

[Over Current Limiter (O.C.L)]

The highest drain current (Q101) is limited by a limiter circuit (IC101) of 24V. The 24V output is limited by this circuit.

[Over Voltage Circuit]
If the 24V output increases because the error detecting circuit or control circuit is broken, IC101 will recognize this signal and output becomes 0V.
Dummy load method (to quickly check the power supply output)
Refer to 2.3.3.6. Power Supply Board Section.

7. FOR THE SCHEMATIC DIAGRAMS

Note:

1. **DC voltage measurements are taken with an oscilloscope or a tester with a ground.**
2. **The schematic diagrams and circuit board may be modified at any time with the development of new technology.**
3.

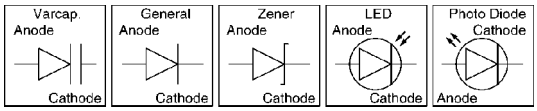

Important safety notice
Components identified by ⚠ mark have special characteristics important for safety. When replacing any of these components, use only the manufacturer's specified parts.

8. PRINTED CIRCUIT BOARD (DIGITAL BOARD) -1

8.1. PRINTED CIRCUIT BOARD (DIGITAL BOARD For: PFUP1129Z)

8.2. PRINTED CIRCUIT BOARD (DIGITAL BOARD For: PFUP1129Z)

9. SCHEMATIC DIAGRAM (DIGITAL CIRCUIT)

9.1. SCHEMATIC DIAGRAM (DIGITAL CIRCUIT For PFUP1129Z)

9.2. SCHEMATIC DIAGRAM (DIGITAL CIRCUIT For PFUP1129Y)

10. PRINTED CIRCUIT BOARD (DIGITAL BOARD) -2

10.1. PRINTED CIRCUIT BOARD (DIGITAL BOARD For: PFUP1129Y)

10.2. PRINTED CIRCUIT BOARD (DIGITAL BOARD For: PFUP1129Y)

11. PRINTED CIRCUIT BOARD (ANALOG BOARD)

11.1. PRINTED CIRCUIT BOARD (ANALOG BOARD)

11.2. PRINTED CIRCUIT BOARD (ANALOG BOARD)

12. SCHEMATIC DIAGRAM (ANALOG CIRCUIT)

12.1. MEMO

13. PRINTED CIRCUIT BOARD (SWITCHING POWER SUPPLY)

13.1. MEMO

14. SCHEMATIC DIAGRAM (SWITCHING POWER SUPPLY)

14.1. MEMO

15. PRINTED CIRCUIT BOARD (OPERATION BOARD)

15.1. MEMO

16. SCHEMATIC DIAGRAM (OPERATION CIRCUIT)

16.1. MEMO

17. TERMINAL GUIDE OF THE IC'S TRANSISTORS AND DIODES

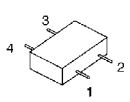 PFVIS80842AN	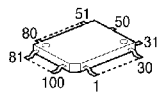 PQVIR96DFXL	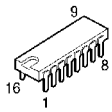 PFVIT2003APS	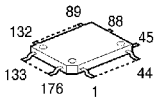 PFVIM66410G1	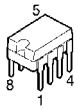 PFVIFA5317P
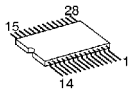 PFVIGM6256FF	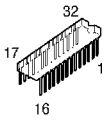 PFWIFP105M	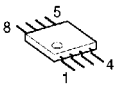 PQVINJM2113M PQVINJM4558M	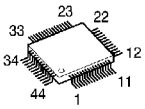 MN53007QAF	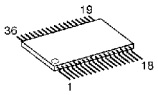 AN6383SB
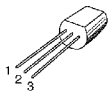 AN1431T, 2SK2640	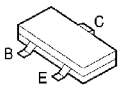 PQVTDTC144E PQVTDTC114EU 2SC4155R, 2SC4155S	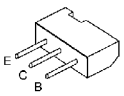 2SB1322, 2SD1921Q	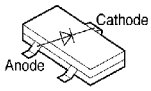 MA141WK	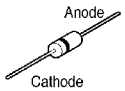 PQVDERA1802 PFVDAG01A MA165
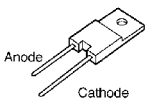 PFVDSF5LC20U	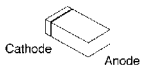 MA143	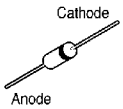 1SS119	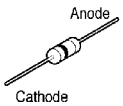 MA7160, PFVD1N4005 MA4220, PFVDD1NL20U	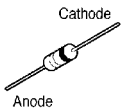 PFVDRMRLS245 MA4056
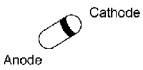 RLS71	PFVTSI4431DY	PFVIPQ05RD11		

18. FIXTURES AND TOOLS

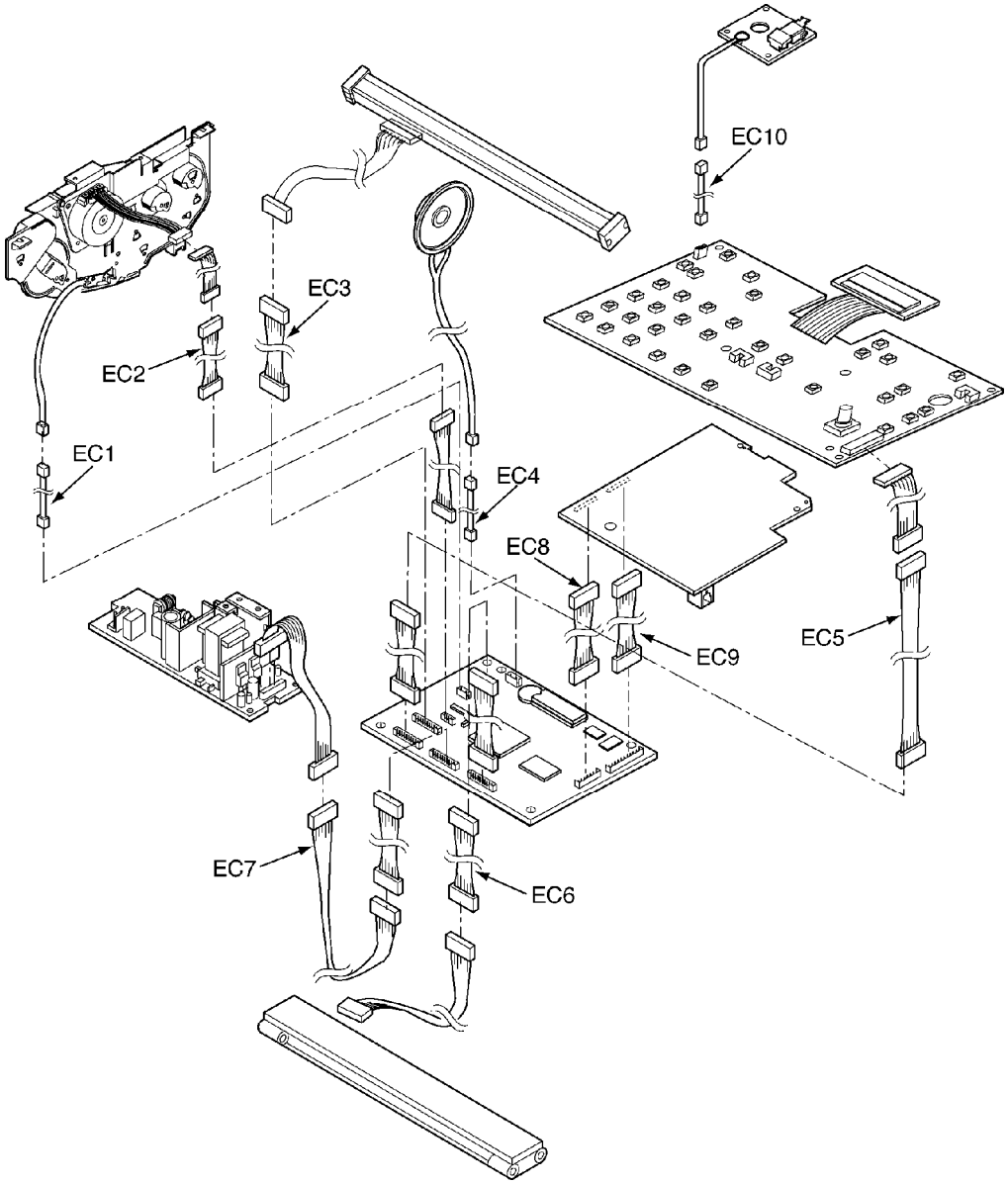

19. CABINET, MECHANICAL AND ELECTRICAL PARTS LOCATION

19.1. OPERATION PANEL SECTION

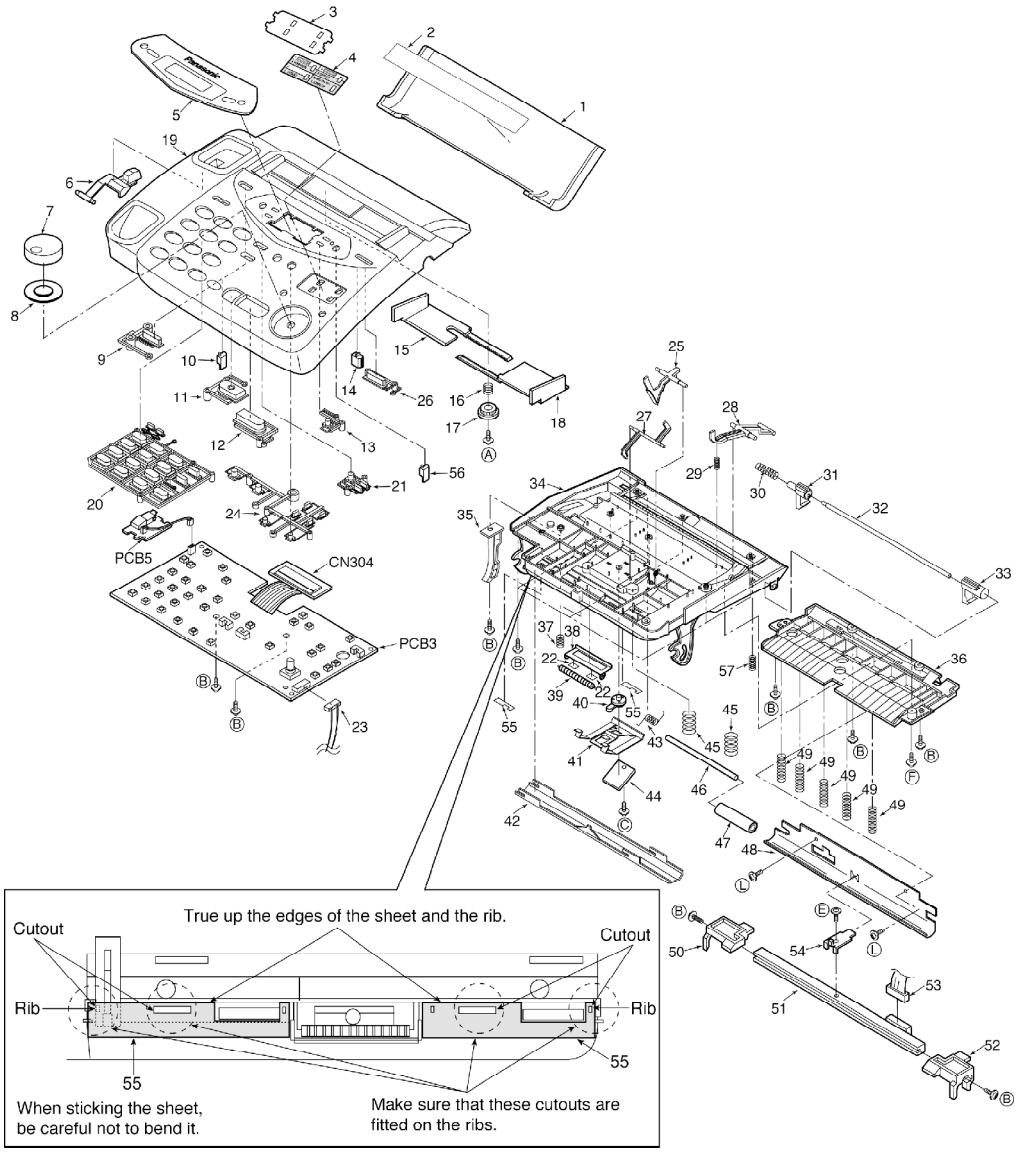

19.2. UPPER CABINET SECTION

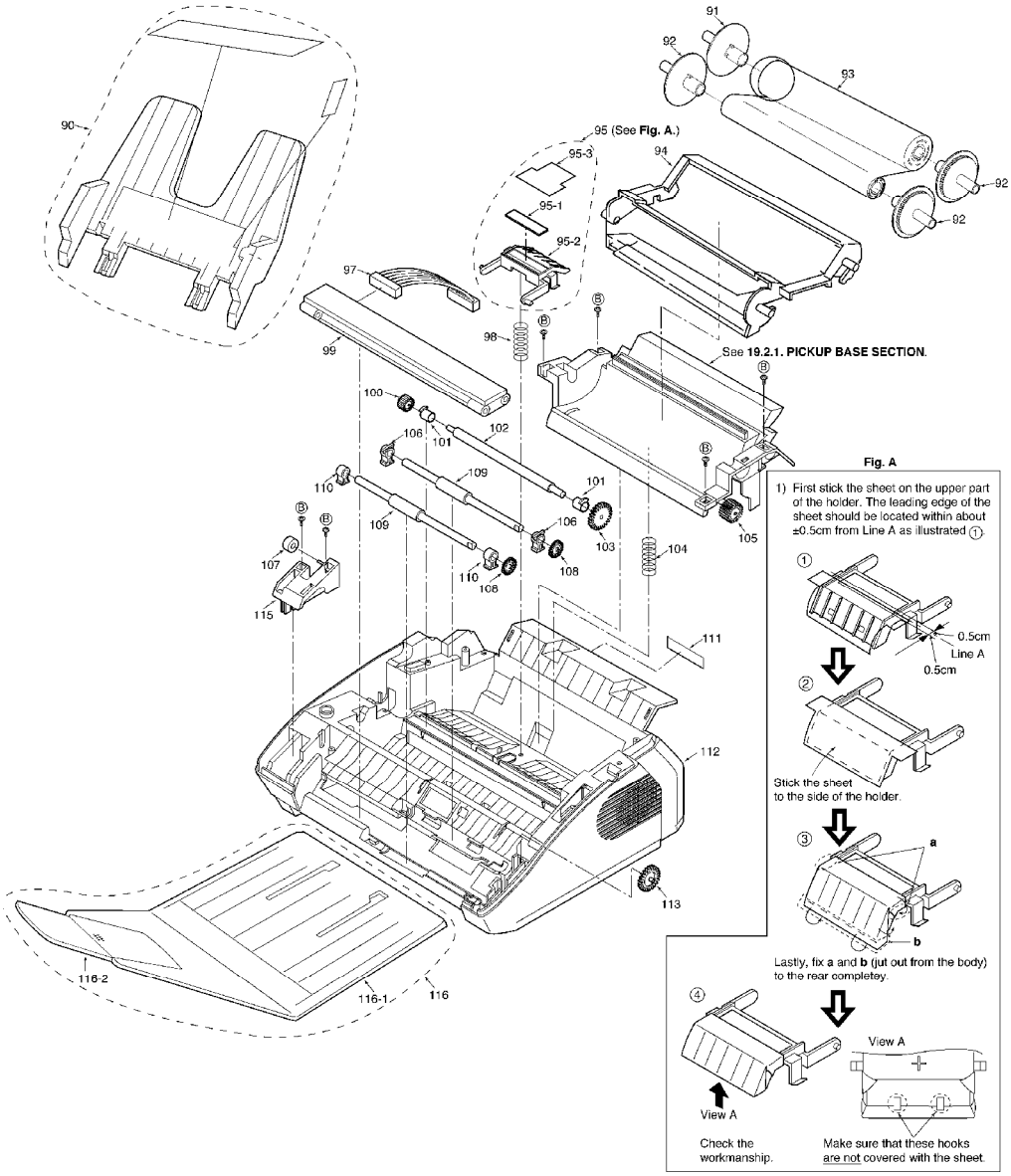

19.2.1. PICK UP BASE SECTION

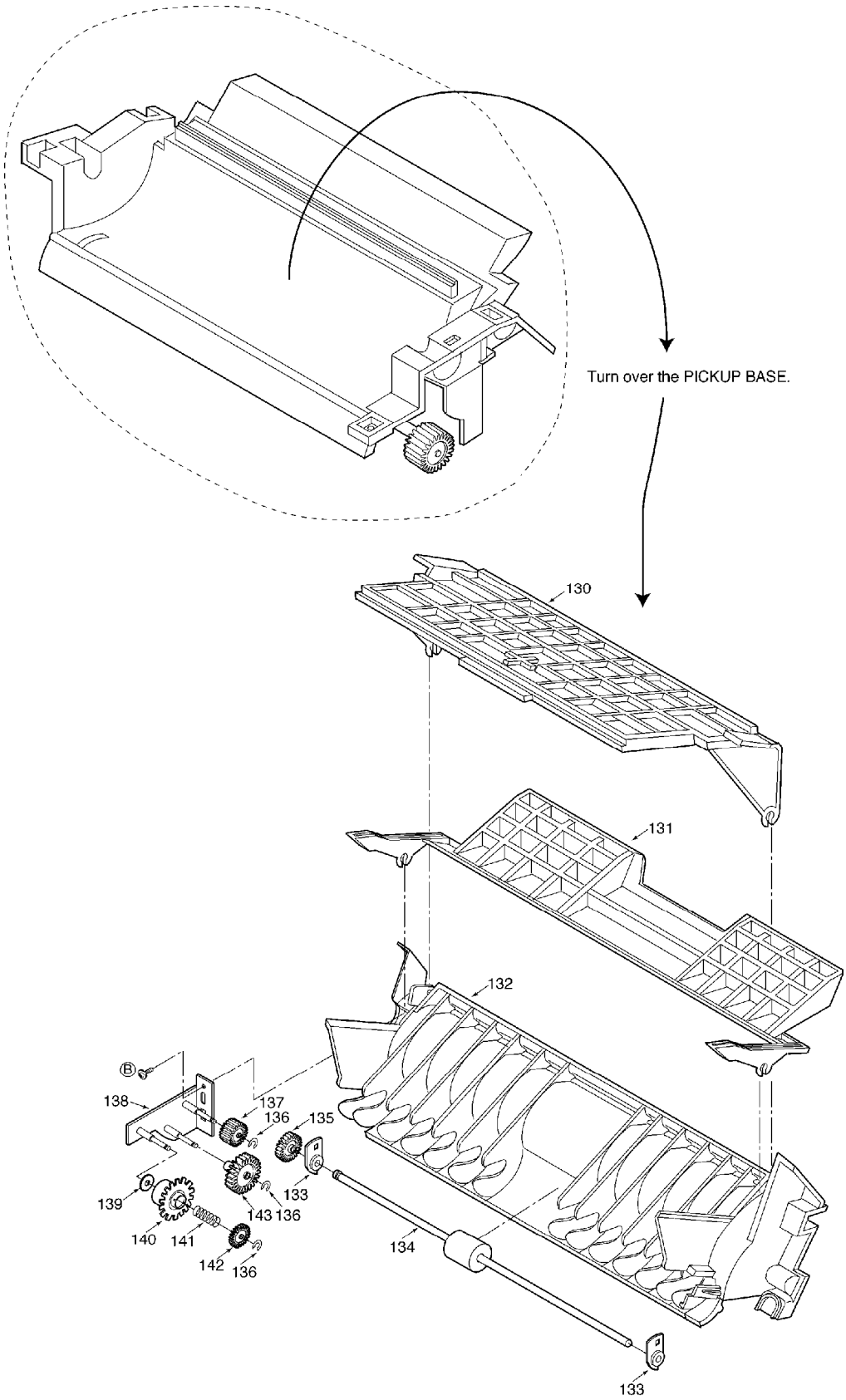

19.3. LOWER/P.C.B. SECTION

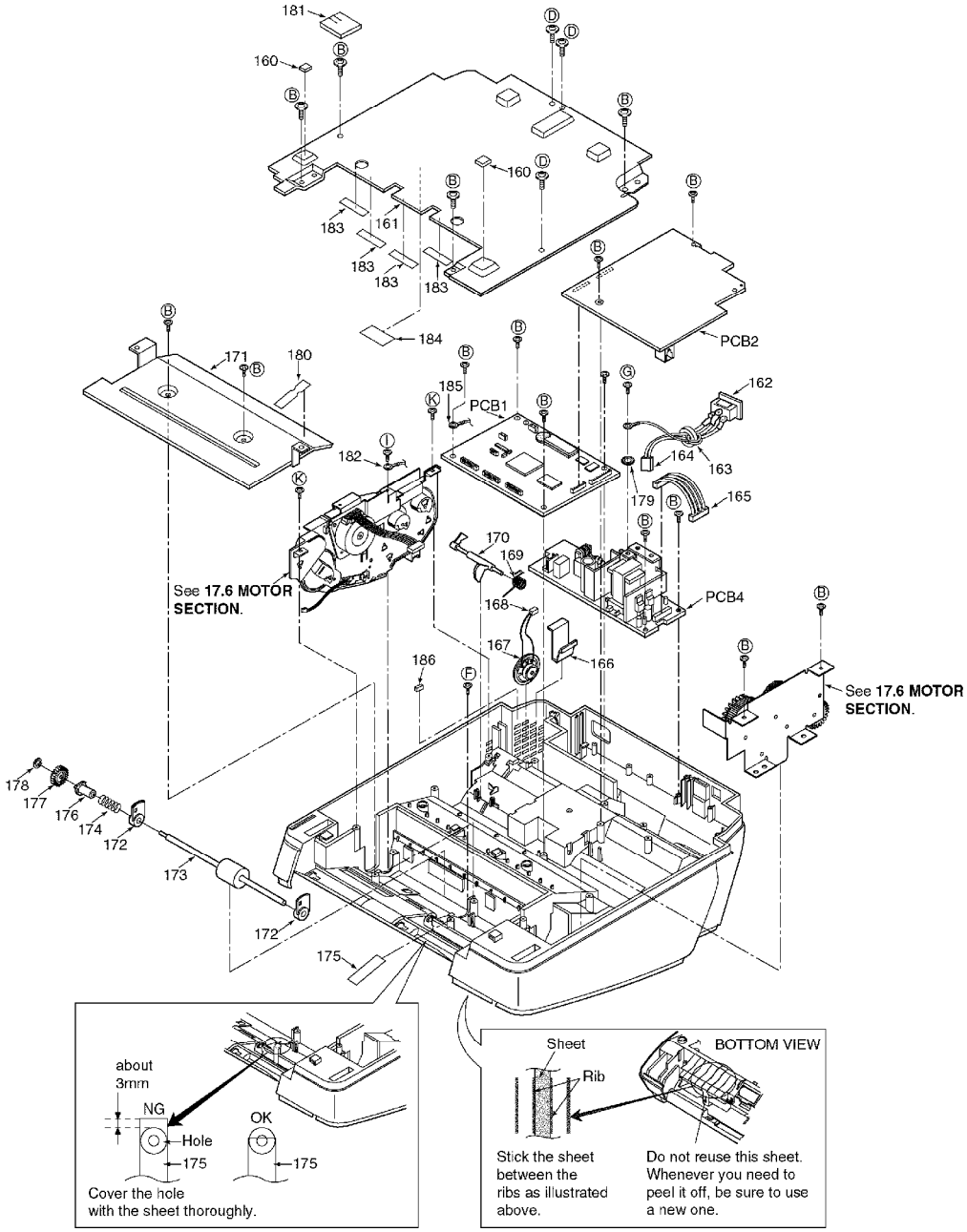

19.4. MOTOR SECTION

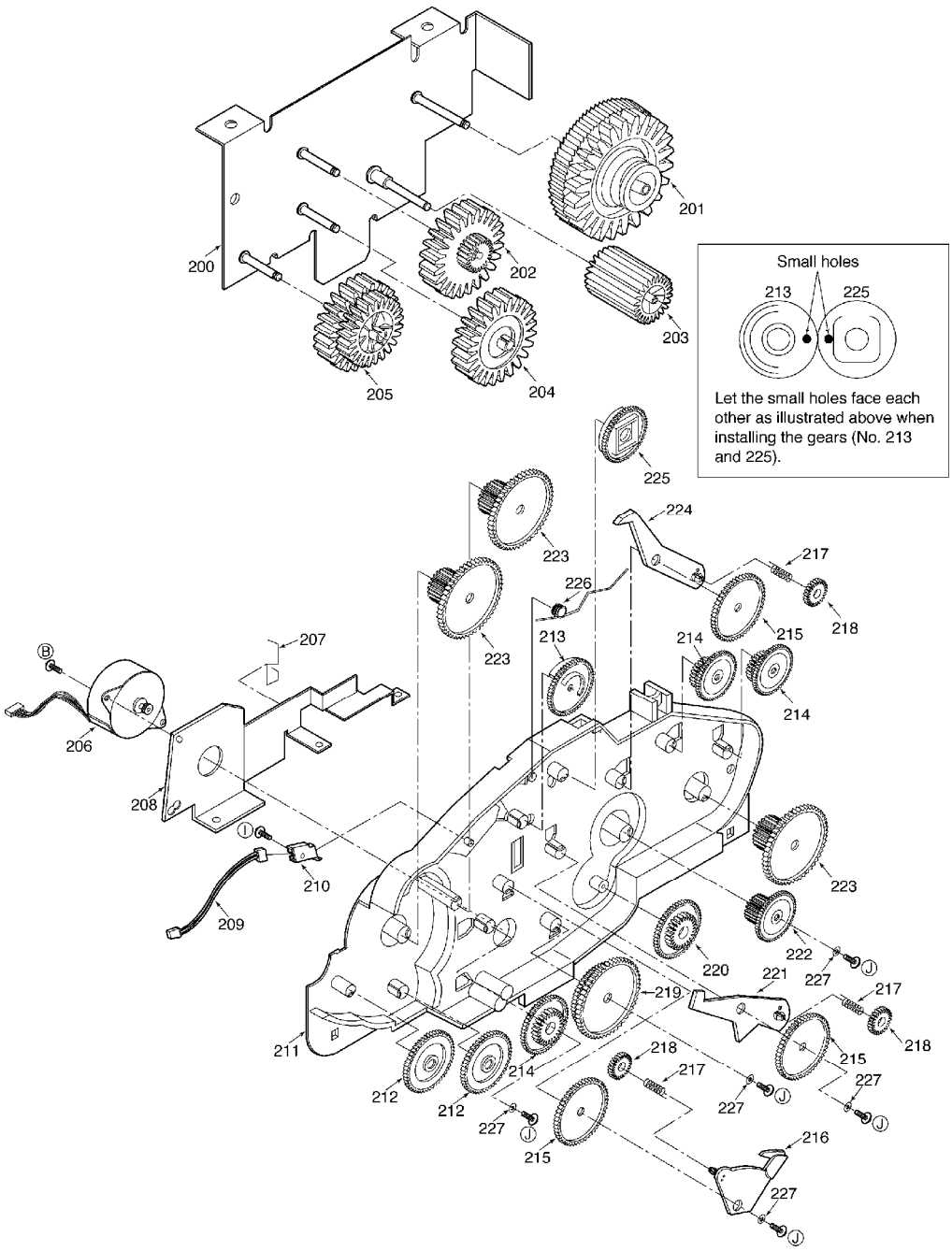

19.5. ACTUAL SIZE OF SCREWS AND WASHER

	Part No.	Illustration
Ⓐ	XTW3+W6P	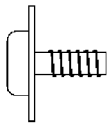
Ⓑ	XTW3+S10P	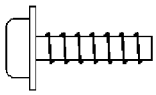
Ⓒ	XTW3+S6PR	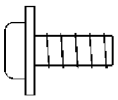
Ⓓ	XTW3+U6LFZ	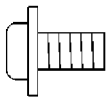
Ⓔ	XTW3+5LR	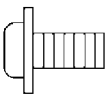
Ⓕ	XTW3+W8P	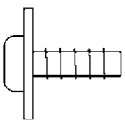
Ⓖ	XSB4+6	
Ⓗ	Not Used	
Ⓘ	XTW2+R10P	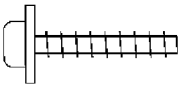
Ⓙ	XTW2+R8PFN	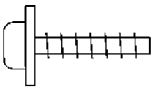
Ⓚ	XTW3+S12P	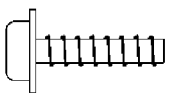

Ⓛ	XTW3+U8L	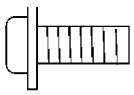

20. ACCESSORIES AND PACKING MATERIALS

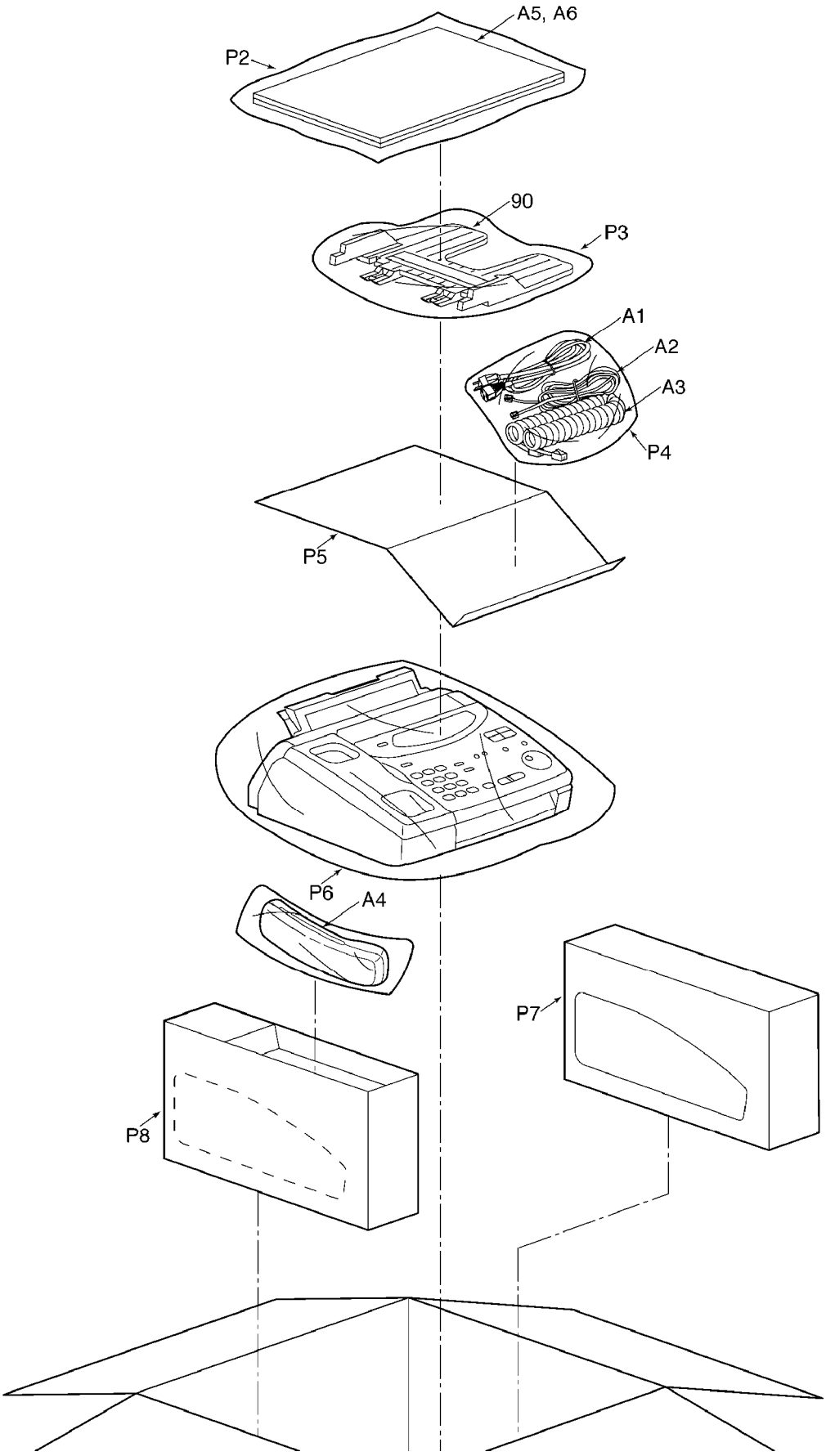
A5, A6
P2
90
P3
A1
A2
A3
P4
P5
P6
A4
P7
P8

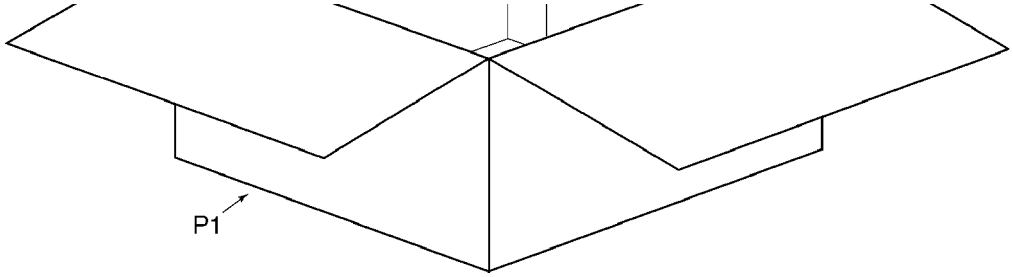

21. REPLACEMENT PARTS LIST

This replacement parts list is for KX-FP105 only.
Refer to the simplified manual (cover) for other areas.
Notes:

1. **The marking (RTL) indicates that the Retention Time is limited for this item.**
   After the discontinuation of this assembly in production, the item will continue to be available for a specific period of time. The retention period of availability is dependent on the type of assembly, and in accordance with the laws govering parts and product retention.
   After the end of this period, the assembly will no longer be available.
2. **Important safety notice / Components identified by ⚠ mark have special characteristics important for safety. When replacing any of these components, use only manufacture's specified parts.**
3. **The S mark indicates service standard parts and may differ from production parts.**
4. **RESISTORS & CAPACITORS / Unless otherwise specified; / All resistors are in ohms (Ω) K=1000 Ω , M=1000k Ω / All capacitors are in MICRO FARADS (μ F) P= μ μ F / *Type & Wattage of Resistor**

Type

ERC:Solid ERD:Carbon PQ4R:Chip	ERX:Metal Film ERG:Metal Oxide ERO:Metal Film	PQRD:Carbon PQRQ:Fuse ERF:Wire Wound

Wattege

10,16,18:1/8W	14,25,S2:1/4W	12,50,S1:1/2W	1:1W	2:2W	5:5W

ECFD:Semi-Conductor ECQS:Styrol PQCBX,ECUV:Chip ECMS:Mica	ECCD,ECKD,PQCBC,PQVP : Ceramic ECQM,ECQV,ECQE,ECQU,ECQB : Polyester ECEA,ECSZ,ECOS : Electrolytic ECQP : Polypropylene

Voltage

ECQ Type	ECQG ECQV Type	ECSZ Type	Others	
1H : 50V 2A : 100V 2E : 250V 2H : 500V	05 : 50V 1 : 100V 2 : 200V	OF : 3.15V 1A : 10V 1V : 35V OJ : 6.3V	OJ : 6.3V 1A : 10V 1C : 16V 1E,25 : 25V	1V : 35V 50,1H : 50V 1J : 63V 2A : 100V

21.1. CABINET AND ELECTRICAL PARTS

Ref. No.	Part No.	Part Name & Description	Remarks
		(19.1. OPRATION PANEL SECTION)	
1	PFKS1028Z1	TRAY, DOCUMENT	
2	PFQT1475Z	INDICATION LABEL	
3	PFGV1007Z	COVER, TEL CARD	
4	PFGD1041Z	CARD, TEL	
5	PFGP1143Z	PANEL, LCD	
6	PFBH1009Z2	BUTTON, HOOK	
7	PFBE1002Z2	JOG DIAL	S
8	PFHX1199Z	SHEET, JOG	
9	PFBC1031Z1	BUTTON, HELP	
10	PFGP1131Z	LED COVER, A	
11	PFBC1037Z1	BUTTON, STOP	
12	PFBC1030Z1	BUTTON, START	
13	Not used		
14	PFGP1132Z	LED COVER, B	
15	PFKR1012Z1	GUIDE DOCUMENT	
16	PFUS1034Z	SPRING, DOCUMENT GUIDE	
17	PFDG1002Z	GEAR DOCUMENT GUIDE	
18	PFKR1013Z1	GUIDE DOCUMENT	
19	PFGG1036W1	OPERATION PANEL	
20	PFBX1069Z1	BUTTON, DIAL	
21	PFBX1072Y1	BUTTON, IQ FAX	
22	PFHX1154Y	SHEET, HEAD FULCROM	
23	PFJS11Q26Z	CONNECTOR,11P	
24	PFBX1070Z1	BUTTON, 8 KEY	
25	PFDE1084Y	LEVER DOC. DETECTION	
26	PFBC1032Z1	LEVER, AUTO ANSWER	
27	PFDE1085Z	LEVER	
28	PFDE1086Z	LEVER COVER OPEN SENSOR	
29	PFUS1027Z	SPRING DOC. LEVER	
30	PFUS1110Z	SPRING LOCK LEVER	
31	PFDE1070Z	LEVER LOCK (LEFT)	
32	PFDF1040Z	SHAFT LOCK LEVER	
33	PFDE1071Z2	LEVER LOCK (RIGHT)	

Ref. No.	Part No.	Part Name & Description	Remarks
34	PFUV1022Z	COVER, OPERATION PANEL	
35	PFHR1115Z	ARM, DUMPER	
36	PFUV1023Z	HEAD BASE	
37	PFUS1182Z	SPRING, SHEIDING	
38	PFUS1093Z	SPRING, SUPPORT ROLLER	
39	PQDR10005Y	ROLLER SUPPORT EXIT PRINT	
40	PFHR1019Z	LEVER SEPARATION ADJ.	
41	PFUS1153Z	SPRING DOCUMENT FEED	
42	PFMH1046Y	PLATE, WHITE	
43	PFUS1156Z	SPRING, ERATH	
44	PFHG1061Z	RUBBER, SEPARATE	
45	PFUS1025Z	SPRING, ROLLER	
46	PFDF1005Z	SHAFT SUPPORT ROLLER	
47	PFDR1011Z	ROLLER, SUPPORT	
48	PFMH1063Z	HEAD FRAME	
49	PFUS1152Z	SPRING THERMAL HEAD	
50	PFHR1128Z	GUIDE (RIGHT)	
51	PFJHS016Z	THERMAL HEAD	
52	PFHR1127Z	GUIDE (LEFT)	
53	PFJS12Q25Z	CONNECTOR, 12P	
54	PFMH1059Z	HEAD FULCRUM	
55	PFHX1258Z	SHEET, SHUTTER	
56	PFBX1071Y1	BUTTON, TAM	
57	PFUS1154Y	SPRING, POPUP	
		(19.2. UPPER CABINET SECTION)	
90	PFKS1030Z1	PAPER TRAY ASS'Y	S
91	PFDG1038Z1	GEAR, RIBBON FLANGE 2	
92	PFDG1037Z	GEAR RIBBON FLANGE 1	
93	PFPE1040Z	INK RIBBON (20m)	
94	PFHR1122Z1	CHASSIS	
95	PFZEFP101M	P.SEPARATION HOLDER ASS'Y	
95-1	PFHG1055Y	RUBBER, P.SEPARATION	
95-2	PFHR1118Z	RUBBER P.SEPARATION HOLDER	
95-3	PFHX1270Z	SHEET, P.SEPARATION RUBBER	
96	Not Used		
97	PFJS10Q28Z	CONNECTOR, 10P	
98	PFUS1068Z	SPRING P.SEPARATION HOLDER	
99	PF0U1016Z	CIS (CONTACT IMAGE SENSOR)	
100	PFDG1082Z	GEAR PLATEN ROLLER	
101	PFDJ1011Z	PLATEN SUPPORT	
102	PFDN1028Z	ROLLER, PLATEN	
103	PFDG1027Y	GEAR PLATEN DRIVE	
104	PFUS1158Z	SPRING PAPER TRAY	S
105	Not Used		
106	PFDJ1014Z	SPACER SUB ROLLER	
107	PFDR1005Z	ROLLER, DUMPER	
108	PFDG1071Z	GEAR, SENDING	
109	PFDN1030Z	ROLLER DOCUMNET FEED	

Ref. No.	Part No.	Part Name & Description	Remarks
110	PFDJ1007Z	SPACER, ROLLER	
111	PFGT1441Z-M	NAME PLATE	⚠
112	PFKM1043Y1	UPPER CABINET	
113	PFDG1105Z	GEAR, IDLER	
114	Not used		
115	PFHR1117Z1	HOLDER, CIS	
116	PFZXFP105M	PAPER STACKER ASS,Y	
116-1	PFKS1031Z1	STACKER	
116-2	PFKS1021Z1	SUB STACKER	
		(19.2.1. PICKUP BASE SECTION)	
130	PFKS1029Z	PLATE, CASSETTE	
131	PFDE1090Z1	LEVER, CASSETTE	
132	PFHR1116Z1	PICKUP BASE	
133	PQDJ10002Z	SPACER, ROLLER	
134	PFDN1027Z	ROLLER, PICKUP	
135	PFDG1083Z	GEAR PICKUP ROLLER	
136	XUC2FY	RETAINING RING	
137	PFDG1098Z	GEAR RIBBON DRIVE	
138	PFUA1021Z	PLATE, BACK TENSION	
139	PFHG1057Z	FELT, BACK TENSION	
140	PFDG1102Z	GEAR	
141	PFUS1183Z	SPRING BACK TENSION	
142	PFDG1029Y	GEAR, RIBBON DRIVE	
143	PFDG1103Z	GEAR, BACK TENSION IDLER	
		(19.3. LOWER/P.C.B. SECTION)	
160	PFHG1050Z	RUBBER, LEG	S
161	PFMD1033Z	FRAME, BOTTOM	
162	PQJP03S07Z	CONNECTOR, 3P	⚠
163	PQLB1E1	FERRITE CORE	
164	PQJS02Q59Y	CONNECTOR, 2P	
165	PFJS08Q27Z	CONNECTOR, 8P	
166	PFMH1029Z	SPRING, SPEAKER	
167	PFAS50P003Z	SPEAKER	
168	PFJS02Q23Z	CONNECTOR, 2P	
169	PFUS1166Z	SPRING P.TOP SENSOR	
170	PFDE1089Y	LEVER, P.TOP SENSOR	
171	PFMD1032Z	COVER	
172	PQDJ10002Z	SPACER, ROLLER	
173	PFDN1029Z	ROLLER SEPARATION	
174	PQUS10055Z	SPRING, ONE WAY	
175	PFHX1264Y	SPACER, ROLLER	
176	PFDE1059Z	DELAY	
177	PFDG1085Z	GEAR SEPARATION ROLLER	
178	XUC2FY	RETAINING RING	
179	XWC4B	WASHER	

Ref. No.	Part No.	Part Name & Description	Remarks
180	PFHX1263Z	SHEET, ROLLING	
181	PFHX1246Z	COVER, SCREW	
182	WLL20YB46M3M	WASHER	
183	PFHX1148Z	VIBRATION SHEET	
184	PFHX1272Z	SHEET, CIS LED	
185	PQHM112Z	CLAMPER	
186	PFHX1271Z	SHEET, SPEAKER	
		(19.4. MOTOR SECTION)	
200	PFUA1020Z	WIND GEAR CHASSIS	
201	PFDX1011Z	GEAR TORQUE LIMITTER	
202	PFDG1109Z	GEAR, M	
203	PFDG1106Z	GEAR RIBBOM DRIVE	
204	PFDG1108Z	GEAR, L	
205	PFDG1107Z	GEAR, K	
206	PFJQ1014Z	DC MOTOR	
207	PFUS1157Z	SPRING, EARTH	
208	PFMD1034Y	MOTER PLATE	
209	PFJS03Q32Z	CONNECTOR, 3P	
210	PQST2A04Z	SEESAW SWITCH	
211	PFUA1019W	MAIN GEAR CHASSIS	
212	PFDG1090Z	GEAR, F	
213	PFDG1110Z	GEAR, G	
214	PFDG1087Z	GEAR, B	
215	PFDG1022Z	GEAR, D	
216	PFHR1119Y	ARM, X	
217	PFUS1147Z	SPRING, GEAR C	
218	PFDG1021Z	GEAR, C	
219	PFDG1111Z	GEAR, H	
220	PFDG1112Z	GEAR, I	
221	PFHR1120Z	ARM, Y	
222	PFDG1113Z	GEAR, J	
223	PFDG1086Z	GEAR, A	
224	PFHR1121Z	ARM, Z	
225	PFDG1089Z	GEAR, E	
226	PFUS1159Z	SPRING, GEAR ARM	
227	PFHX1266Z	WASHER	
		(20 ACCESSORIES AND PACKING MATERIALS)	
A1	PFJA1030Z	POWER CORD	⚠S
A2	PQJA10075Z	CORD, TEL	⚠
A3	PFJA1029Z	CORD, HANDSET	
A4	PFJXE0805Z	HANDSET	
A5	PFQX1278Z	INSTRUCTION BOOK	
A6	PFQV1036Z	ADVANTAGE PROGRAM SHEET	

Ref. No.	Part No.	Part Name & Description	Remarks
P1	PFPK1460Z-M	GIFT BOX	
P2	XZB32X45A04	BAG,POLYETHYLENE	
P3	PQPP10005Z	BAG,POLYETHYLENE	
P4	XZB20X35A04	BAG,POLYETHYLENE	
P5	PFPD1077Z	PAD	
P6	PFPH1011Z	PACKING SHEET	
P7	PFPN1185Z	PAD (RIGHT)	
P8	PFPN1184Z	PAD (LEFT)	

21.2. DIGITAL BOARD PARTS

Ref. No.	Part No.	Part Name & Description	Remarks
		(ICS)	
IC501	PFVIM66410G1	IC	
IC502	PFWIFP105M	IC (ROM)	
IC503	PFVIMS5148F	IC	
IC504	PFVIGM6256FF	IC	S
IC505	PQVIR96DFXLC	IC	
IC506	PFVIT2003APS	IC	
IC507	PQVINJM2113M	IC	
IC509	PFVIS80842AN	IC	
IC511	AN6383SB	IC	
PS501	PFVIRM574SL	IC	
PS502	PFVIRM574SL	IC	
		(TRANSISTORS)	
Q501	PQVTDTC114EU	TRANSISTOR(SI)	
Q502	2SB1322	TRANSISTOR(SI)	S
Q503	2SC4155R	TRANSISTOR(SI)	
Q505	2SC4155R	TRANSISTOR(SI)	
Q506	2SC4155R	TRANSISTOR(SI)	
Q507	2SB709A	TRANSISTOR(SI)	
Q510	2SC4155R	TRANSISTOR(SI)	
Q513	2SC4155R	TRANSISTOR(SI)	
Q514	2SB709A	TRANSISTOR(SI)	
Q515	PQVTDTC114EU	TRANSISTOR(SI)	
Q516	PQVTDTC143E	TRANSISTOR(SI)	
IC508	PFVTSI4431DY	TRANSISTOR(SI)	
		(DIODES)	

Ref. No.	Part No.	Part Name & Description	Remarks
D501	PFVDRMRLS245	DIODE(SI)	
D502	MA7160	DIODE(SI)	
D503	PFVDRMRLS245	DIODE(SI)	
D504	RLS71	DIODE(SI)	
DA501	MA141WK	DIODE(SI)	
DA502	MA143	DIODE(SI)	
		(BATTERY)	
BAT501	PQPCR2032H09	BATTERY	
		(CONNECTORS)	
CN501	PQJP10A19Z	CONNECTOR, 10P	
CN502	PQJP09A19Z	CONNECTOR, 9P	
CN503	PQJP02G100Z	CONNECTOR, 2P	
CN504	PQJP10G30Y	CONNECTOR, 10P	
CN505	PQJP11G30Y	CONNECTOR,11P	
CN506	PQJP5G30Y	CONNECTOR,5P	
CN507	PQJP2G30Y	CONNECTOR, 2P	
CN508	PQJP12G30Y	CONNECTOR, 12P	
CN509	PQJP8G30Y	CONNECTOR, 8P	
		(COILS)	
L501	PQLQR1ET	COIL	
L503	PQLQR1RM601	COIL	
L504	PQLQR2BT	COIL	S
L505	PQLQR2BT	COIL	S
L506	PQLQR2BT	COIL	S
L507	PQLQR2KA20T	COIL	
L508	PQLQR2KA20T	COIL	
L509	PQLQR2KA20T	COIL	
L510	PQLQR2KA20T	COIL	
L511	PQLQR2KA20T	COIL	
		(CRYSTAL OSCILLATIONS)	
X501	PFVCCFS32Z	CRYSTAL OSCILLATOR	
X502	PFVCCSA24Z	CRYSTAL OSCILLATOR	
		(COMPONENTS COMBINATIONS)	
RA501	EXRV8V271JV	COMPONENTS COMBINATION	
RA502	EXRV8V271JV	COMPONENTS COMBINATION	
RA503	EXRV8V271JV	COMPONENTS COMBINATION	
RA504	EXRV8V271JV	COMPONENTS COMBINATION	

Ref. No.	Part No.	Part Name & Description	Remarks
RA505	EXRV8V271JV	COMPONENTS COMBINATION	
		(RESISTORS)	
F501	ERDS1VJ000	0	
L502	PQ4R18XJ000	0	
R501	ERJ3GEYJ472	4.7K	
R502	ERJ3GEYJ102	1K	
R503	ERJ3GEYJ562	5.6K	
R504	ERJ3GEYJ472	4.7K	
R505	ERDS1VJ152	1.5K	
R506	ERJ3GEYJ821	820	
R507	ERJ3GEYJ223	22K	
R508	ERJ3GEYJ823	82K	
R509	ERJ3GEYJ333	33K	
R510	ERJ3GEYJ472	4.7K	
R511	ERJ3GEYJ103	10K	
R512	ERJ3GEY0R00	0	
R513	ERJ3GEYJ203	20K	
R514	ERJ3GEYJ103	10K	
R515	ERJ3GEYJ103	10K	
R516	ERJ3GEYJ473	47K	
R517	ERJ3GEYJ473	47K	
R518	ERJ3GEYJ102	1K	
R519	ERJ3GEYJ102	1K	
R520	ERJ3GEYJ103	10K	
R522	ERJ3GEYJ102	1K	
R524	PFVF2A102FT	1K	
R530	PFVF2A102FT	1K	
R531	ERJ3GEYJ103	10K	
R532	ERJ3GEYJ223	22K	
R535	ERJ3GEYJ104	100K	
R536	ERJ3GEYJ104	100K	
R537	ERJ3GEYJ563	56K	
R538	ERJ3GEYJ104	100K	
R539	ERJ3GEYJ103	10K	
R540	ERJ3GEYJ472	4.7K	
R541	ERJ3GEYJ103	10K	
R542	ERJ3GEYJ103	10K	
R547	ERJ3GEYJ221	220	
R548	ERJ3GEYJ270	27	
R549	ERJ3GEYJ105	1M	
R550	ERJ3GEYJ103	10K	
R552	ERJ3GEYJ563	56K	
R553	ERJ3GEYJ562	5.6K	
R554	ERJ3GEYJ101	100	

Ref. No.	Part No.	Part Name & Description	Remarks
R555	ERJ3GEYJ121	120	
R556	ERJ3GEY0R00	0	
R557	PQ4R10XJ000	0	
R558	ERJ3GEYJ103	10K	
R559	ERJ3GEYJ103	10K	
R560	ERJ3GEYJ103	10K	
R561	ERJ3GEYJ103	10K	
R562	ERJ3GEYJ222	2.2K	
R563	ERJ3GEYJ472	4.7K	
R567	ERJ3GEY0R00	0	
R568	ERJ3GEYJ103	10K	
R569	ERJ3EKF1101	1.1K	
R570	ERJ3EKF4701	4.7K	
R575	ERJ6ENF4752	0	S
R576	ERJ3GEYJ183	18K	
R577	ERJ3GEYJ124	120K	
R578	ERJ3GEYJ623	62K	
R579	ERJ3GEYJ224	220K	
R580	ERJ3GEYJ332	3.3K	
R581	PQ4R18XJ220	22	
R582	ERJ3GEYJ273	27K	
R584	ERJ3GEYJ183	18K	
R585	ERJ3GEYJ183	18K	
R587	ERJ3GEYJ154	150K	
R588	ERJ3GEYJ102	1K	
R589	ERJ3GEYJ223	22K	
R590	ERJ3GEYJ823	82K	
R591	ERJ3GEYJ474	470K	
R595	ERJ3GEYJ273	27K	
R596	ERJ3GEYJ822	8.2K	
R600	ERJ3GEYJ682	6.8K	
R601	ERJ3GEYJ183	18K	
R605	ERJ3GEYJ472	4.7K	
R608	ERJ3GEYJ224	220K	
R609	ERJ3GEYJ224	220K	
R610	ERJ3GEYJ103	10K	
R611	PQ4R10XJ472	4.7K	
R612	ERJ3GEY0R00	0	
R613	ERJ3GEYJ103	10K	
R614	ERJ3GEYJ564	560K	
R615	ERJ3GEYJ221	220	
R616	ERJ3GEYJ392	3.9K	
R617	ERJ3GEYJ224	220K	
R620	ERJ3GEYJ271	270	
R621	ERJ3GEYJ101	100	
R622	ERJ3GEYJ101	100	
R623	ERJ3GEYJ101	100	

Ref. No.	Part No.	Part Name & Description	Remarks
R624	ERJ3GEYJ472	4.7K	
R625	ERJ3GEYJ153	15K	
R626	ERJ3GEYJ472	4.7K	
R627	ERJ3GEYJ103	10K	
R628	ERJ3GEYJ101	100	
R629	ERJ3GEYJ101	100	
R630	ERJ3GEY0R00	0	
R631	ERJ3GEY0R00	0	
R632	ERJ3GEYJ101	100	
R633	ERJ3GEYJ101	100	
R634	ERJ3GEYJ271	270	
R635	ERJ3GEYJ271	270	
R636	ERJ3GEY0R00	0	
		(CAPASITORS)	
C501	ECUV1H102KBV	0.001	
C502	PQCUV1H473MD	0.047	S
C503	ECUV1H561JCV	560P	
C504	ECUV1H222KBV	0.0022	
C505	ECUV1H102KBV	0.001	
C506	ECUV1H104ZFV	0.1	S
C507	ECUV1H104ZFV	0.1	S
C508	ECUV1H104ZFV	0.1	S
C509	ECUV1H104ZFV	0.1	S
C511	ECUV1H104ZFV	0.1	S
C512	ECUV1H104ZFV	0.1	S
C513	ECUV1H102KBV	0.001	
C514	ECUV1H102KBV	0.001	
C515	ECUV1H104ZFV	0.1	S
C516	ECUV1H104ZFV	0.1	S
C517	ECUV1C104KBV	0.1	
C518	ECUV1C104KBV	0.1	
C521	ECUV1H104ZFV	0.1	S
C522	ECUV1H120JCV	12P	
C523	ECUV1H104ZFV	0.1	S
C524	ECUV1H104ZFV	0.1	S
C526	ECUV1H180JCV	18P	
C527	ECUV1H104ZFV	0.1	S
C528	ECUV1H104ZFV	0.1	S
C529	ECUV1H104ZFV	0.1	S
C532	ECUV1H104ZFV	0.1	S
C534	ECUV1H333KDV	0.033	S
C535	ECUV1H104ZFV	0.1	S
C536	ECUV1H104ZFV	0.1	S
C537	ECUV1H104ZFV	0.1	S
C538	ECUV1H104ZFV	0.1	S
C540	ECUV1H120JCV	12P	

Ref. No.	Part No.	Part Name & Description	Remarks
C541	ECUV1H100DCV	10P	S
C542	ECUV1H333KDV	0.033	S
C545	ECUV1C224ZFV	0.22	
C547	ECUV1H103KBV	0.01	
C548	PQCUV1H105JC	1	S
C549	ECUV1H102KBV	0.001	
C550	ECUV1H102KBV	0.001	
C551	PQCUV1H105JC	1	S
C552	ECUV1C104KBV	0.1	
C553	ECUV1H102KBV	0.001	
C554	ECUV1H104ZFV	0.1	S
C557	ECUV1H104ZFV	0.1	S
C558	ECUV1H330JCV	33P	
C559	ECEA1CKS100	10P	
C560	ECUV1C224ZFV	0.22	
C561	ECUV1H104ZFV	0.1	S
C562	ECUV1C104KBV	0.1	
C563	ECUV1C104KBV	0.1	
C568	ECUV1H104ZFV	0.1	S
C569	ECUV1H331JCV	330P	S
C570	ECUV1H104ZFV	0.1	S
C571	ECEA1CK101	100P	
C572	ECEA1CKS100	10P	
C573	ECUV1H152KBV	0.0015	
C574	ECUV1H271JCV	270P	
C577	ECEA0JK221	220P	
C578	ECUV1C683KBV	0.068	
C579	ECUV1C683KBV	0.068	
C580	ECUV1H104ZFV	0.1	S
C581	ECUV1C104KBV	0.1	
C582	PQCUV1C224KB	0.22	S
C584	ECUV1H331JCV	330P	S
C585	ECUV1C104KBV	0.1	
C586	ECUV1H102KBV	0.001	
C587	ECUV1H680JCV	68P	
C588	ECUV1H331JCV	330P	S
C591	ECUV1C104KBV	0.1	
C593	PQCUV1H105JC	1	S
C594	ECUV1C104KBV	0.1	
C595	ECUV1H104ZFV	0.1	S
C596	ECUV1C123KBV	0.012	
C597	ECEA0JK221	220P	
C598	ECEA1CK101	100P	
C599	PQCUV1C224KB	0.22	S
C600	ECUV1C123KBV	0.012	
C608	ECEA1CK101	100P	
C609	ECUV1H104ZFV	0.1	S

Ref. No.	Part No.	Part Name & Description	Remarks
C610	ECUV1C104KBV	0.1	
C611	ECUV1H472KBV	0.0047	
C613	ECUV1H681JCV	680P	
C614	ECUV1H681JCV	680P	
C615	ECUV1H681JCV	680P	
C616	ECUV1H680JCV	68P	S
C617	ECUV1H104ZFV	0.1	
C618	ECUV1H182KBV	0.0018	
C621	ECUV1C104KBV	0.1	
C622	ECUV1C224ZFV	0.22	
C624	ECUV1H104ZFV	0.1	S
		(FUSE)	
F502	PFRB001251KC	FUSE	
F503	PFRB002122KZ	FUSE	

21.3. ANALOG BOARD PARTS

Ref. No.	Part No.	Part Name & Description	Remarks
		(ICS)	
IC101	PQVINJM4558M	IC	S
		(TRANSISTORS)	
Q108	PQVTDTC143E	TRANSISTOR(SI)	
Q109	2SC4155S	TRANSISTOR(SI)	S
		(DIODES)	
D104	MA4056	DIODE(SI)	
D105	MA4056	DIODE(SI)	
D106	MA4056	DIODE(SI)	
D110	1SS119	DIODE(SI)	
D111	1SS119	DIODE(SI)	
D112	1SS119	DIODE(SI)	

Ref. No.	Part No.	Part Name & Description	Remarks
		(CONNECTORS)	
CN101	PQJS10A10Z	CONNECTOR,10P	
CN102	PQJS9A10Z	CONNECTOR, 9P	
		(JACKS)	
CN103	PFJJ1T01Z	JACK	
CN104	PFJJ1T01Z	JACK	
CN105	PQJJ1TB18Z	JACK	
		(COILS)	
L106	PQLQR2KA113T	COIL	
L107	PQLQR2KA113T	COIL	
L108	PQLQR2KA113T	COIL	
L109	PQLQR2KA113T	COIL	
LF101	PFLE003	COIL	S
		(CERAMIC FILTERS)	
L101	PFVF2B182SDT	CERAMIC FILTER	
L102	PFVF2B182SDT	CERAMIC FILTER	
L104	PFVF2B182SDT	CERAMIC FILTER	
L105	PFVF2B182SDT	CERAMIC FILTER	
		(RESISTORS)	
R107	ERG2SJ151	150	
R113	ERDS1TJ330	33	S
R114	ERDS2TJ152	1.5K	
R115	ERDS1TJ473	47K	S
R116	ERDS1TJ473	47K	S
R123	ERJ3GEYJ103	10K	
R124	ERJ3GEYJ273	27K	
R125	ERJ3GEYJ331	330	
R127	ERJ3GEYJ563	56K	
R128	ERJ3GEYJ103	10K	
R129	ERJ3GEYJ823	82K	
R130	ERJ3GEYJ184	180K	
R131	ERJ3GEYJ473	47K	
R132	ERJ3GEYJ184	180K	
R137	ERJ3GEYJ473	47K	
R138	ERJ3GEYJ114	110K	

Ref. No.	Part No.	Part Name & Description	Remarks
R140	ERJ3GEYJ472	4.7K	
R145	ERJ3GEYJ331	330	
R146	ERJ3GEYJ152	1.5K	
R147	ERJ3GEYJ152	1.5K	
R167	ERJ3GEYJ103	10K	
R168	ERJ3GEYJ103	10K	
R169	ERJ3GEYJ103	10K	
R173	ERJ3GEYJ473	47K	
R174	ERDS2TJ271	270	
R177	PQ4R10XJ000	0	
		(CAPASITORS)	
C111	ECUV1H333KDV	0.033	S
C112	PQCUV1H105JC	1	S
C114	ECQE2E334KZ	0.33	S
C123	ECUV1C104KBV	0.1	
C124	ECUV1E273KBV	0.027	
C125	ECUV1H101JCV	100P	
C126	ECUV1C104KBV	0.1	
C127	ECUV1H101JCV	100P	
C128	PQCUV1H104ZF	0.1	
C129	ECEA1HKS100	10	S
C131	ECUV1C104KBV	0.1	
C132	ECUV1H101JCV	100P	
C133	ECEA1HKS100	10	S
C138	ECEA1CKS470	47	S
C147	ECUV1H103KBV	0.01	
C148	ECEA1HKS4R7	4.7	S
C161	ECUV1C104KBV	0.1	S
C162	PQCUV1H104ZF	0.1	
C163	ECEA1HKS100	10	S
C166	PQCUV1H104ZF	0.1	
C167	ECEA1HKS100	10	S
		(PHOTO ELECTRIC TRANSDUCERS)	
PC103	PQVIPC814K	PHOTO ELECTRIC TRANSDUCER	⚠S
PC105	PFVITLP320	PHOTO ELECTRIC TRANSDUCER	⚠
		(VARISTORS)	

Ref. No.	Part No.	Part Name & Description	Remarks
SA101	PQVDDSS301L	VARISTOR (SURGE ABSORBER)	
SA102	PFVDRA102M	VARISTOR (SURGE ABSORBER)	
		(TRANSFORMERS)	
T101	PFLT8E005	TRANSFORMER	⚠
T102	PQLT8E6A	TRANSFORMER	⚠
		(OTHER)	
POS101	PFRT002	THERMISTOR	
RL101	PFSL001Z	RELAY	⚠

21.4. OPERATION BOARD PARTS

Ref. No.	Part No.	Part Name & Description	Remarks
		(ICS)	
IC301	MN53007QAF	IC	
		(DIODES)	
D301	1SS119	DIODE(SI)	
LED301	LNJ801LPDJA	DIODE(SI)	
LED303	LNJ801LPDJA	DIODE(SI)	
		(CONNECTORS)	
CN301	PQJP11G43Y	CONNECTOR,11P	
CN303	PQJP2G30Z	CONNECTOR, 2P	
		(LIQUID CRYSTAL DISPLAY)	
CN304	PFAVM190	LIQUID CRYSTAL DISPLAY	
		(RESISTORS)	

Ref. No.	Part No.	Part Name & Description	Remarks
R301	ERJ3GEYJ471	470	
R302	ERJ3GEYJ471	470	
R303	ERJ3GEYJ181	180	
R304	ERJ3GEYJ181	180	
R305	ERJ3GEYJ181	180	
R306	ERJ3GEY0R00	0	
R307	ERJ3GEYJ181	180	
R308	ERJ3GEYJ181	180	
R309	ERJ3GEYJ181	180	
R310	ERJ3GEY0R00	0	
R311	ERJ3GEY0R00	0	
R312	ERJ3GEY0R00	0	
R313	ERJ3GEY0R00	0	
R314	ERJ3GEY0R00	0	
R315	ERJ3GEY0R00	0	
R316	ERJ3GEY0R00	0	
R319	ERJ3GEY0R00	0	
R320	ERJ3GEYJ103	10K	
R321	ERJ3GEYJ101	100	
R322	ERJ3GEYJ273	27K	
R323	ERJ3GEYJ101	100	
R324	ERJ3GEYJ472	4.7K	
R326	ERJ3GEYJ102	1K	
R327	ERJ3GEYJ563	56K	
R328	ERJ3GEYJ331	330	
R330	ERJ3GEYJ331	330	
R331	ERJ3GEYJ221	220	
R342	ERJ3GEY0R00	0	
R343	PQ4R18XJ000	0	
		(CAPASITORS)	
C301	ECUV1C104KBV	0.1	S
C303	ECEA1AKS101	100	
C306	ECUV1H331JCV	330P	
C308	ECUV1H331JCV	330P	
C309	ECUV1C104KBV	0.1	S
C310	ECUV1C104KBV	0.1	S
C311	ECUV1H103KBV	0.01	
C316	ECUV1C104KBV	0.1	S
		(PHOTO ELECTRIC TRANSDUCERS)	
PS301	CNA1006N	SENSOR	
PS302	CNA1006N	SENSOR	
PS303	CNA1006N	SENSOR	

Ref. No.	Part No.	Part Name & Description	Remarks
		(SWITCHES)	
SW301	EVQ11Y05B	SWITCH, DIAL "*"	
SW302	EVQ11Y05B	SWITCH, VOLUME DOWN	
SW303	EVQ11Y05B	SWITCH, VOLUME UP	
SW304	EVQ11Y05B	SWITCH, HELP	
SW305	EVQ11Y05B	SWITCH, START/SET/COPY	
SW306	EVQ11Y05B	SWITCH, STOP	
SW307	EVQ11Y05B	SWITCH, SP-PHONE	
SW308	EVQ11Y05B	SWITCH, "#"	
SW309	EVQ11Y05B	SWITCH, REDIAL/PAUSE	
SW310	EVQ11Y05B	SWITCH, DIAL "6"	
SW311	EVQ11Y05B	SWITCH, DIAL "5"	
SW312	EVQ11Y05B	SWITCH, DIAL "4"	
SW313	EVQ11Y05B	SWITCH, MUTE	
SW314	EVQ11Y05B	SWITCH, DIAL "3"	
SW315	EVQ11Y05B	SWITCH, DIAL "2"	
SW316	EVQ11Y05B	SWITCH, DIAL "1"	
SW317	EVQ11Y05B	SWITCH, DIAL "9"	
SW318	EVQ11Y05B	SWITCH, DIAL "8"	
SW319	EVQ11Y05B	SWITCH, DIAL "0"	
SW320	EVQ11Y05B	SWITCH, DIAL "7"	
SW321	EVQ11Y05B	SWITCH, PROGRAM	
SW322	EVQ11Y05B	SWITCH, MENU	
SW323	EVQ11Y05B	SWITCH, RESOLUTION	
SW324	EVQ11Y05B	SWITCH, QUICK SCAN	
SW325	EVQ11Y05B	SWITCH, ONE 3,6	
SW326	EVQ11Y05B	SWITCH, LOWER	
SW327	EVQ11Y05B	SWITCH, ONE 2,5	
SW328	EVQ11Y05B	SWITCH, ONE 1,4	
SW329	EVQ11Y05B	SWITCH, IQ FAX	
SW332	EVQ11Y05B	SWITCH, AUTO ANSWER	
SW351	EVQVEHF1712B	SWITCH, JOG DIAL	

21.5. POWER SUPPLY BOARD PARTS

Ref. No.	Part No.	Part Name & Description	Remarks
		(ICS)	
IC101	PFVIFA5317P	IC	
IC201	AN1431T	IC	
IC202	PFVIPQ05RD11	IC	
		(TRANSISTORS)	
Q101	2SK2640	TRANSISTOR(SI)	⚠
		(DIODES)	
D101	PFVD1N4005	DIODE(SI)	⚠
D102	PFVD1N4005	DIODE(SI)	⚠
D103	PFVD1N4005	DIODE(SI)	⚠
D104	PFVD1N4005	DIODE(SI)	⚠
D105	PFVDAG01A	DIODE(SI)	
D106	MA165	DIODE(SI)	
D107	MA4220	DIODE(SI)	
D108	PQVDERA1802	DIODE(SI)	
D109	MA165	DIODE(SI)	
D201	PFVDSF5LC20U	DIODE(SI)	
D202	PFVDD1NL20U	DIODE(SI)	
		(CONNECTORS)	
CN31	PQJP2D98Z	CONNECTOR, 2P	
CN301	PQJP8G30Z	CONNECTOR, 8P	
		(COIL)	
L101	ELF18D290G	COIL	
		(RESISTORS)	
J6	PQ4R10XJ000	0	
R104	ERG1SJ104	100K	

Ref. No.	Part No.	Part Name & Description	Remarks
R105	ERX2SJR22	0.22	
R106	ERG1SJ470	47	
R108	ERDS2FJ150	15	
R109	ERDS2FJ150	15	
R121	PQ4R10XJ103	10K	
R122	PQ4R10XJ561	560	
R123	PQ4R10XJ391	390	
R124	PQ4R10XJ181	180	
R125	PQ4R10XJ103	10K	
R126	PQ4R10XJ562	5.6K	
R127	PQ4R10XJ182	1.8K	
R128	PQ4R10XJ101	100	
R129	PQ4R10XJ104	100K	
R130	PQ4R10XJ104	100K	
R131	PQ4R10XJ154	150K	
R132	PQ4R10XJ393	39K	
R133	PQ4R10XJ393	39K	
R134	PQ4R10XJ393	39K	
R135	PQ4R10XJ393	39K	
R136	PQ4R10XJ393	39K	
R137	PQ4R10XJ393	39K	
R138	PQ4R10XJ334	330K	
R139	PQ4R10XJ334	330K	
R140	PQ4R10XJ334	330K	
R202	ERG2SJ152	1.5K	
R221	PQ4R10XJ222	2.2K	
R222	PQ4R10XJ222	2.2K	
R223	PQ4R10XJ101	100	
R224	PQ4R10XJ273	27K	
R225	PQ4R10XJ332	3.3K	
		(PHOTO ELECTRIC TRANSDUCERS)	
PC101	0N3131SKU	PHOTO COUPLER	⚠
PC102	0N3131SKU	PHOTO COUPLER	⚠
		(CAPASITORS)	
C101	ECQU2A224MG	0.22	⚠
C102	ECQU2A104MV	0.1	⚠
C103	PFKDE2GA222M	0.0022	⚠
C104	PFKDE2GA222M	0.0022	⚠
C105	PFKDE2GA222M	0.0022	⚠
C106	PFEU200SX180	180	
C108	ECKD3A102KBP	0.001	

Ref. No.	Part No.	Part Name & Description	Remarks
C109	ECA1VHG470	47P	
C119	ECKD3A221KBP	220P	
C121	ECUV1H472KBN	0.0047	
C122	ECUV1C224KBX	0.22	
C123	ECUV1H561KBM	560P	
C124	ECUV1H104KBW	0.1	
C201	EEUFA1V471	470	
C202	ECKD3A102KBP	0.001	
C203	PFCEA16A102	0.001	
C204	ECA1VHG470	47P	
C205	ECA1HHG0R47	0.47	
C206	ECKD3A102KBP	0.001	
		(FUSE)	
F101	PQBA1C50NBKL	FUSE	⚠
		(TRANSFORMER)	
T101	ETS29AZ1Y5AC	TRANSFORMER	⚠
		(COMPONENTS PARTS)	
L101	EXCELDR35	COMPONENTS PARTS	⚠
		(VARIABLE RESISTOR)	
VR201	EVNDJAA03B53	VARIABLE RESISTOR	
		(VARISTOR)	
ZNR101	ERZV10DK471U	VARISTOR	⚠

21.6. HOOK BOARD PARTS

Ref. No.	Part No.	Part Name & Description	Remarks
		(CONNECTOR)	
CN401	PFJS02Q24Z	CONNECTOR, 2P	
		(SWITCH)	
SW401	ESE14A211	SWITCH	

21.7. FIXTURES AND TOOLS

Ref. No.	Part No.	Part Name & Description	Remarks
EC1	PQZZ2K6Z	CONNECTOR, 2P	
EC2	PFZZ5K13Z	CONNECTOR, 5P	
EC3	PQZZ12K4Z	CONNECTOR, 12P	
EC4	PQZZ2K12Z	CONNECTOR, 2P	
EC5	PFZZ11K12Z	CONNECTOR, 11P	
EC6	PQZZ10K4Z	CONNECTOR, 10P	
EC7	PQZZ8K18Z	CONNECTOR, 8P	
EC8	PFZZ9K1Z	CONNECTOR, 9P	
EC9	PFZZ10K1Z	CONNECTOR, 10P	
EC10	PQZZ2K1Z	CONNECTOR, 2P	
	KM79811245C0	BASIC FACSIMILE TECHNIQUE	
		(for training service technicians)	

Note:
Tools and Extension Cords are useful for servicing. / (They make servicing easy.)

D(Q) KXFP105 / Printed in Japan

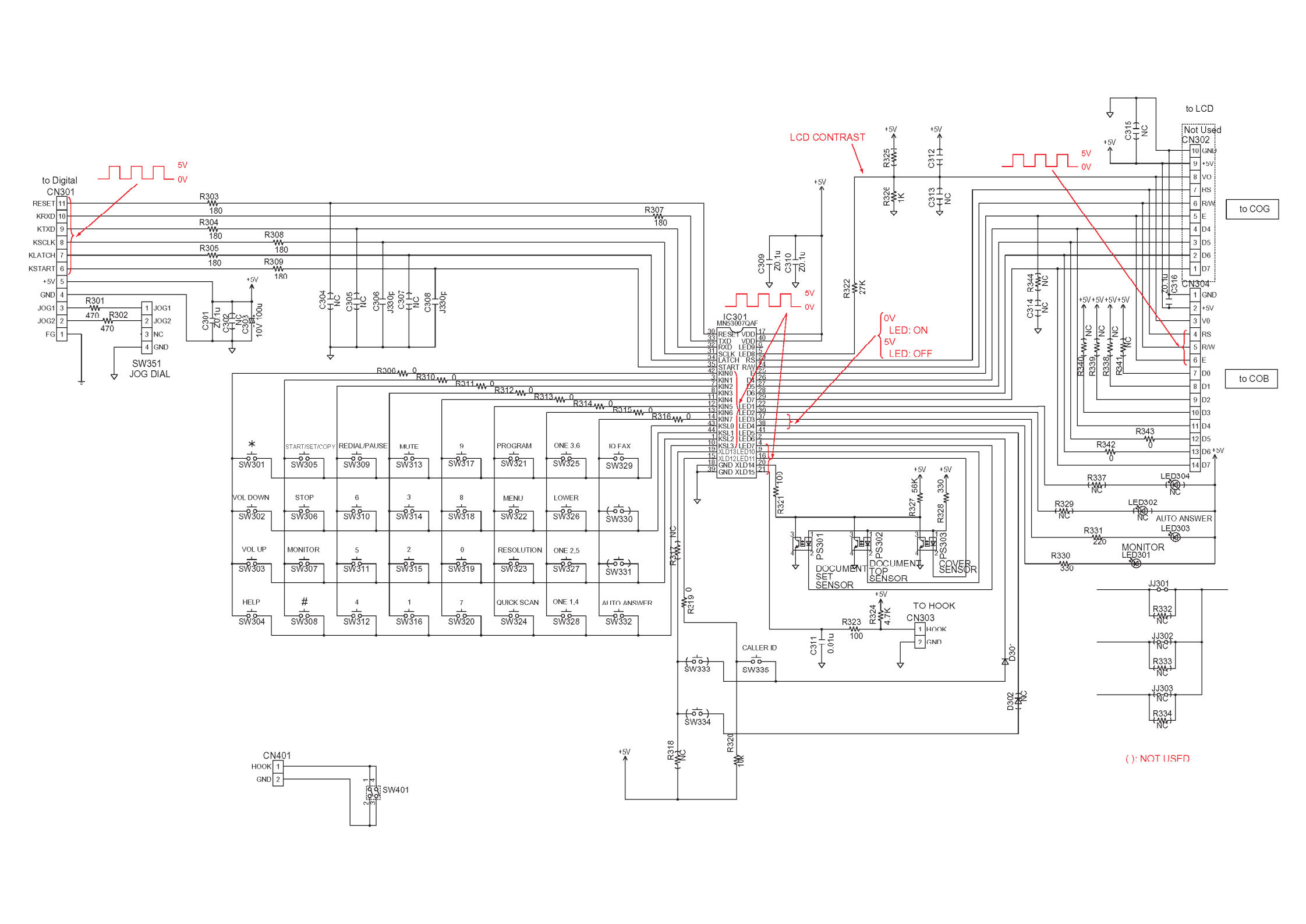
to Digital
CN301
RESET
KRXD
KTXD
KSCLK
KLATCH
KSTART
+5V
GND
JOG1
JOG2
FG
SW351
JOG DIAL
IC301
MN53007QAF
LCD CONTRAST
0V
LED: ON
5V
LED: OFF
to LCD
Not Used
CN302
CN304
to COG
to COB
TO HOOK
CN303
HOOK
GND
CN401
SW401
CALLER ID
SW333
SW334
SW335
DOCUMENT SET SENSOR
DOCUMENT TOP SENSOR
COVER SENSOR
PS301
PS302
PS303
AUTO ANSWER
MONITOR
LED301
LED302
LED303
LED304
JJ301
JJ302
JJ303
( ): NOT USED

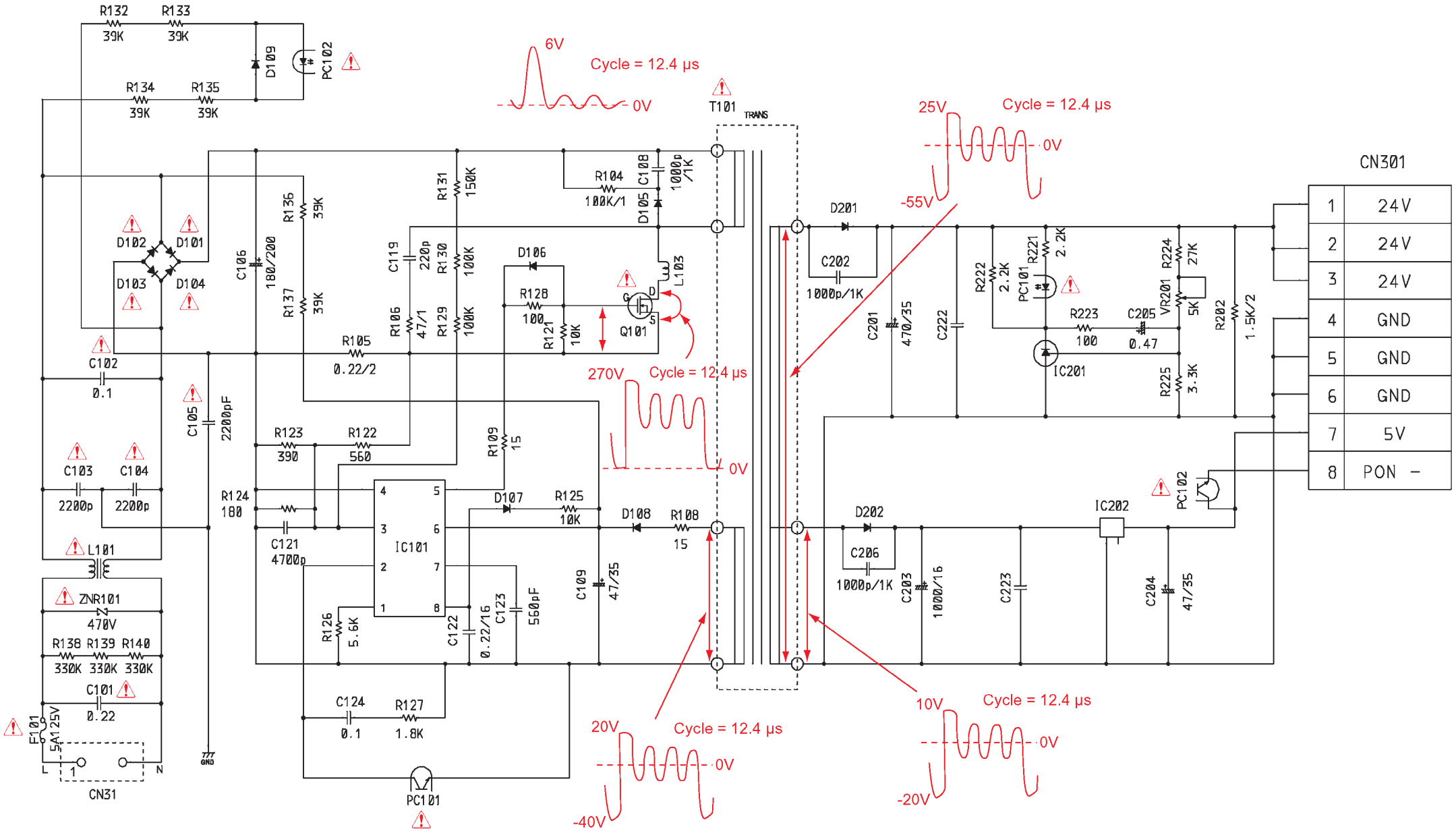
R132 39K
R133 39K
R134 39K
R135 39K
D109
PC102
6V
Cycle = 12.4 µs
0V
T101
TRANS
25V
Cycle = 12.4 µs
0V
-55V
CN301
1 24V
2 24V
3 24V
4 GND
5 GND
6 GND
7 5V
8 PON -
D102
D101
D103
D104
C106 180/200
R136 39K
R137 39K
R131 150K
C119 220p
R130 100K
R106 47/1
R129 100K
R104 100K/1
C108 1000p/1K
D105
D106
R128 100
R121 10K
Q101
L103
R105 0.22/2
C102 0.1
C105 2200pF
C103 2200p
C104 2200p
L101
ZNR101 470V
R138 R139 R140 330K 330K 330K
C101 0.22
F101 5A 125V
CN31
GND
R123 390
R122 560
R124 180
C121 4700p
IC101
R109 15
D107
R125 10K
D108
R108 15
C109 47/35
R126 5.6K
C122 0.22/16
C123 560pF
C124 0.1
R127 1.8K
PC101
270V
Cycle = 12.4 µs
0V
20V
Cycle = 12.4 µs
0V
-40V
D201
C202 1000p/1K
C201 470/35
C222
R222 2.2K
PC101
R221 2.2K
R223 100
C205 0.47
IC201
R224 27K
VR201 5K
R225 3.3K
R202 1.5K/2
D202
C206 1000p/1K
C203 1000/16
C223
IC202
C204 47/35
PC102
10V
Cycle = 12.4 µs
0V
-20V

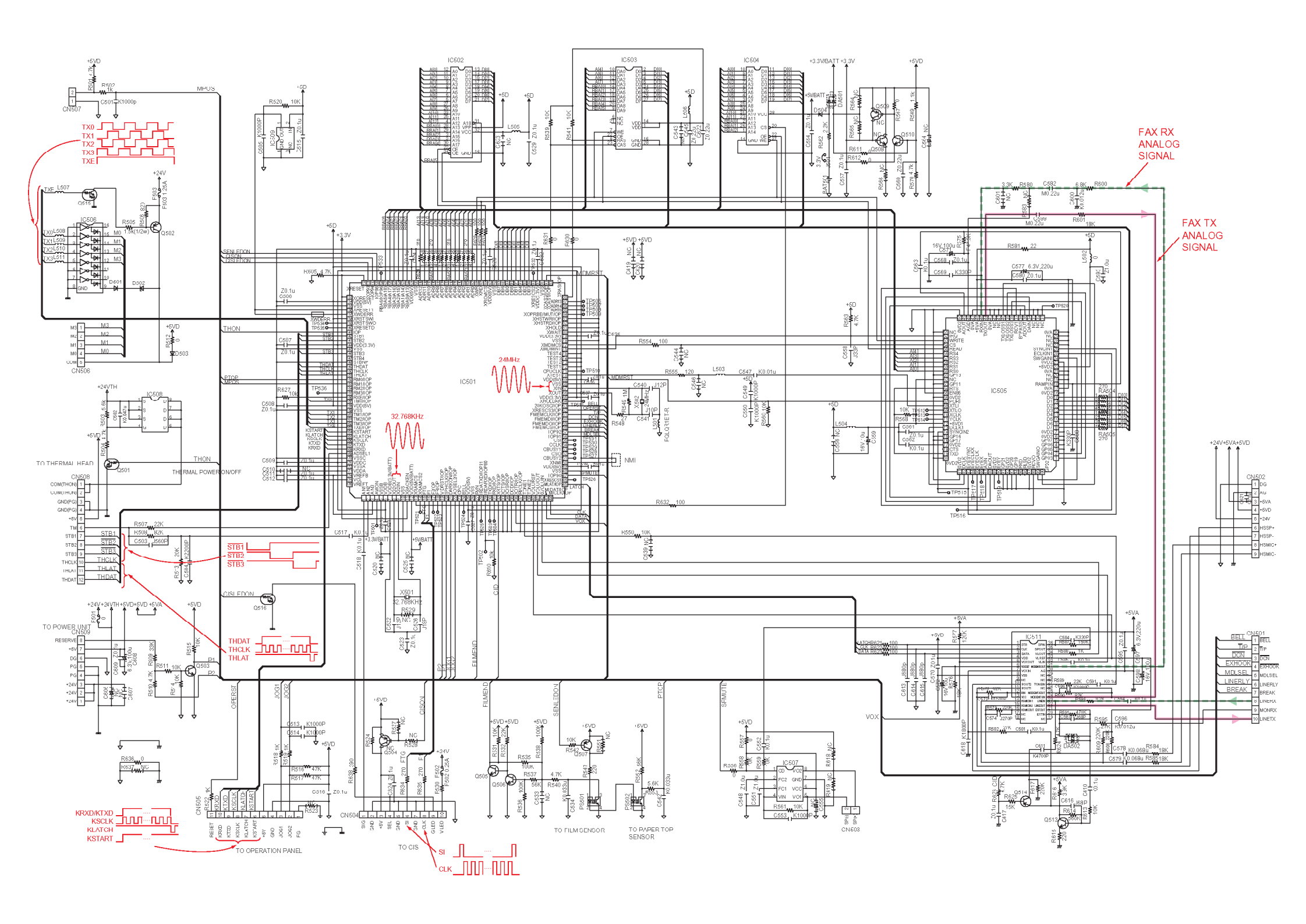
FAX RX ANALOG SIGNAL
FAX TX ANALOG SIGNAL
IC501
IC502
IC503
IC504
IC505
IC506
IC507
IC508
IC509
IC510
IC511
24MHz
32.768KHz
TX0
TX1
TX2
TX3
TXE
STB1
STB2
STB3
THCLK
THLAT
THDAT
KRXD/KTXD
KSCLK
KLATCH
KSTART
SI
CLK
TO OPERATION PANEL
TO CIS
TO FILM SENSOR
TO PAPER TOP SENSOR
TO THERMAL HEAD
TO POWER UNIT
THERMAL POWER ON/OFF
VOX

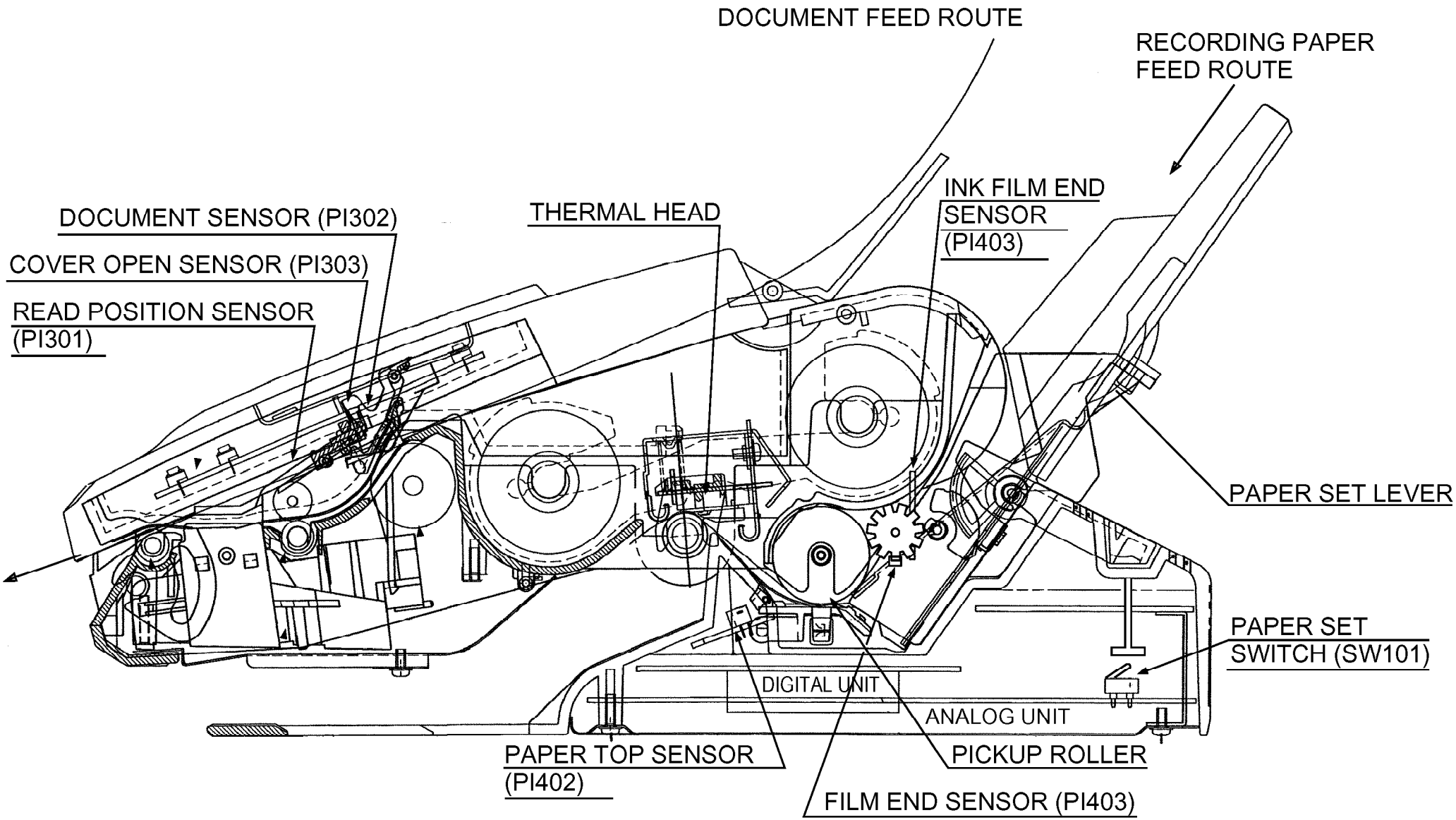
DOCUMENT FEED ROUTE
RECORDING PAPER FEED ROUTE
DOCUMENT SENSOR (PI302)
COVER OPEN SENSOR (PI303)
READ POSITION SENSOR (PI301)
THERMAL HEAD
INK FILM END SENSOR (PI403)
PAPER SET LEVER
PAPER SET SWITCH (SW101)
DIGITAL UNIT
ANALOG UNIT
PAPER TOP SENSOR (PI402)
PICKUP ROLLER
FILM END SENSOR (PI403)

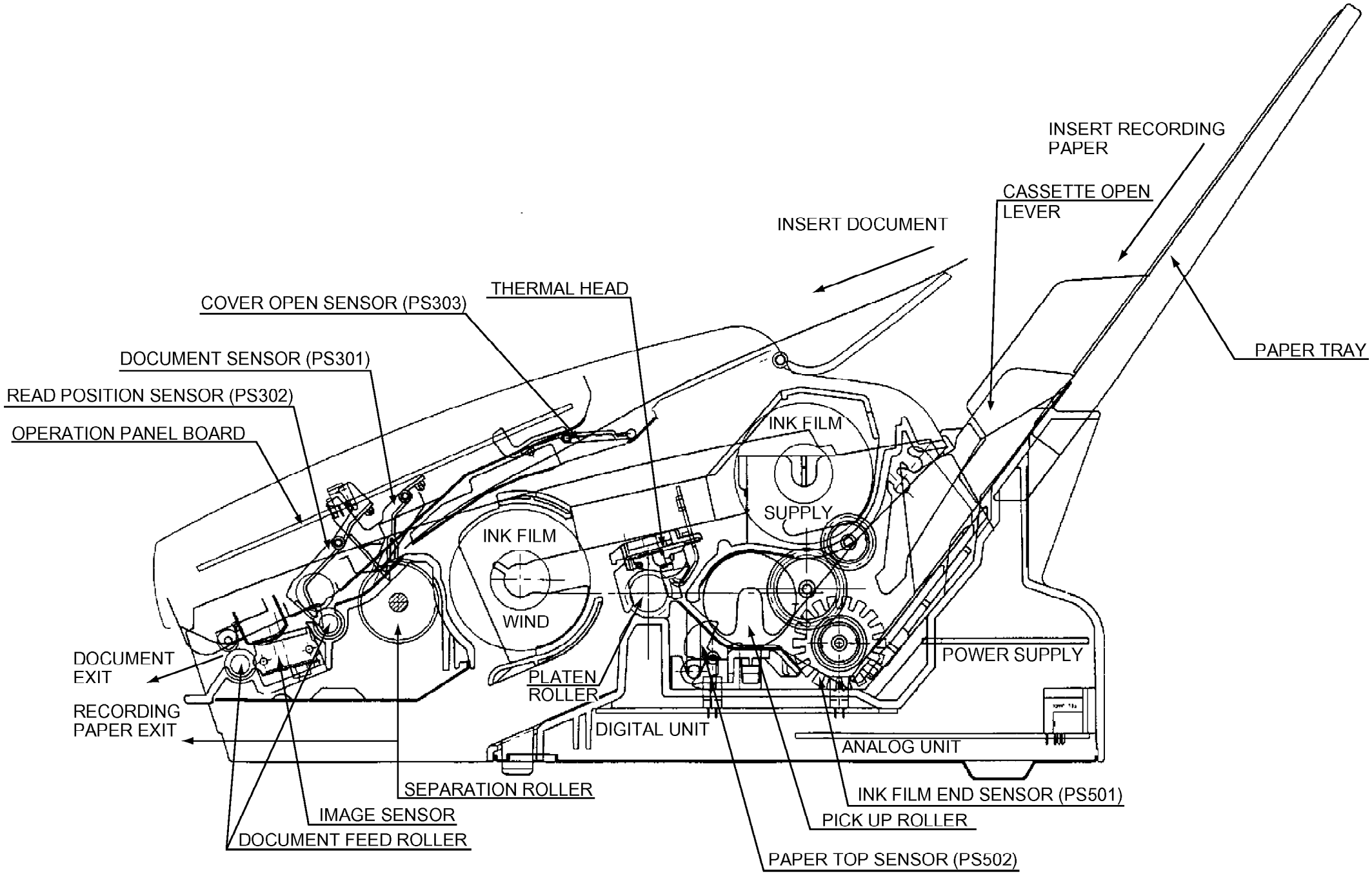
INSERT RECORDING PAPER
CASSETTE OPEN LEVER
INSERT DOCUMENT
PAPER TRAY
THERMAL HEAD
COVER OPEN SENSOR (PS303)
DOCUMENT SENSOR (PS301)
READ POSITION SENSOR (PS302)
OPERATION PANEL BOARD
INK FILM
SUPPLY
INK FILM
WIND
DOCUMENT EXIT
RECORDING PAPER EXIT
PLATEN ROLLER
POWER SUPPLY
DIGITAL UNIT
ANALOG UNIT
SEPARATION ROLLER
INK FILM END SENSOR (PS501)
IMAGE SENSOR
PICK UP ROLLER
DOCUMENT FEED ROLLER
PAPER TOP SENSOR (PS502)

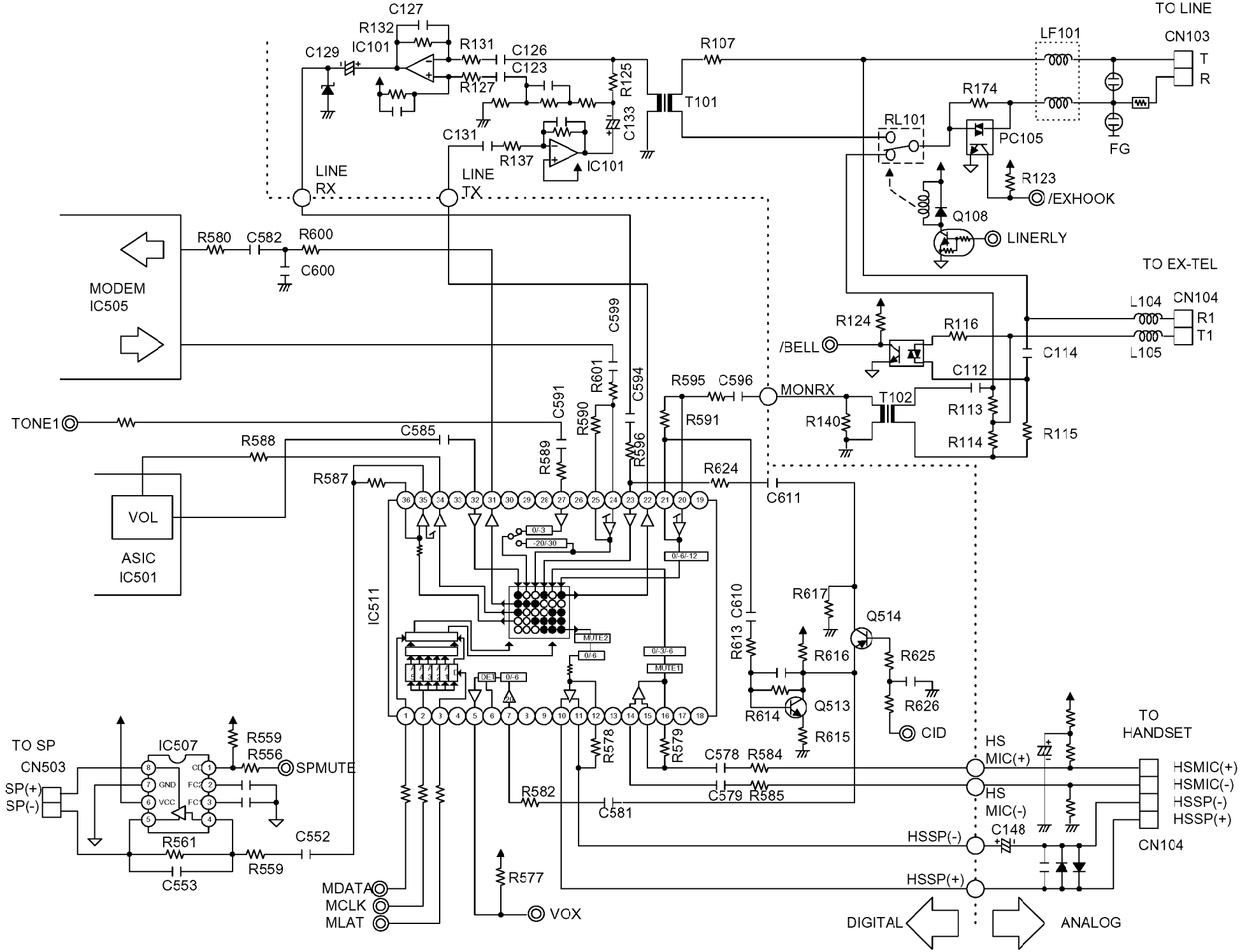

TO LINE
CN103
T
R
LF101
FG
R107
T101
R174
RL101
PC105
R123
/EXHOOK
Q108
LINERLY
C127
R132
IC101
C129
R131
C126
C123
R127
R125
C133
C131
R137
IC101
LINE RX
LINE TX
R580
C582
R600
C600
MODEM IC505
TO EX-TEL
L104
CN104
R1
T1
L105
R124
R116
/BELL
C114
C112
R113
R114
R115
R140
T102
MONRX
R595
C596
R591
C599
R601
C594
C591
R590
R596
R589
TONE1
R588
C585
R587
R624
C611
VOL
ASIC IC501
IC511
0/-3
-20/-30
0/-6/-12
MUTE2
0/-6
0/-3/-6
MUTE1
DET
0/-6
R613
C610
R617
Q514
R616
R625
R614
Q513
R626
R615
CID
TO SP
CN503
SP(+)
SP(-)
IC507
R559
R556
SPMUTE
R561
C552
C553
R559
R578
R579
C578
R584
C579
R585
R582
C581
HS MIC(+)
HS MIC(-)
C148
HSSP(-)
HSSP(+)
TO HANDSET
HSMIC(+)
HSMIC(-)
HSSP(-)
HSSP(+)
CN104
MDATA
MCLK
MLAT
R577
VOX
DIGITAL
ANALOG

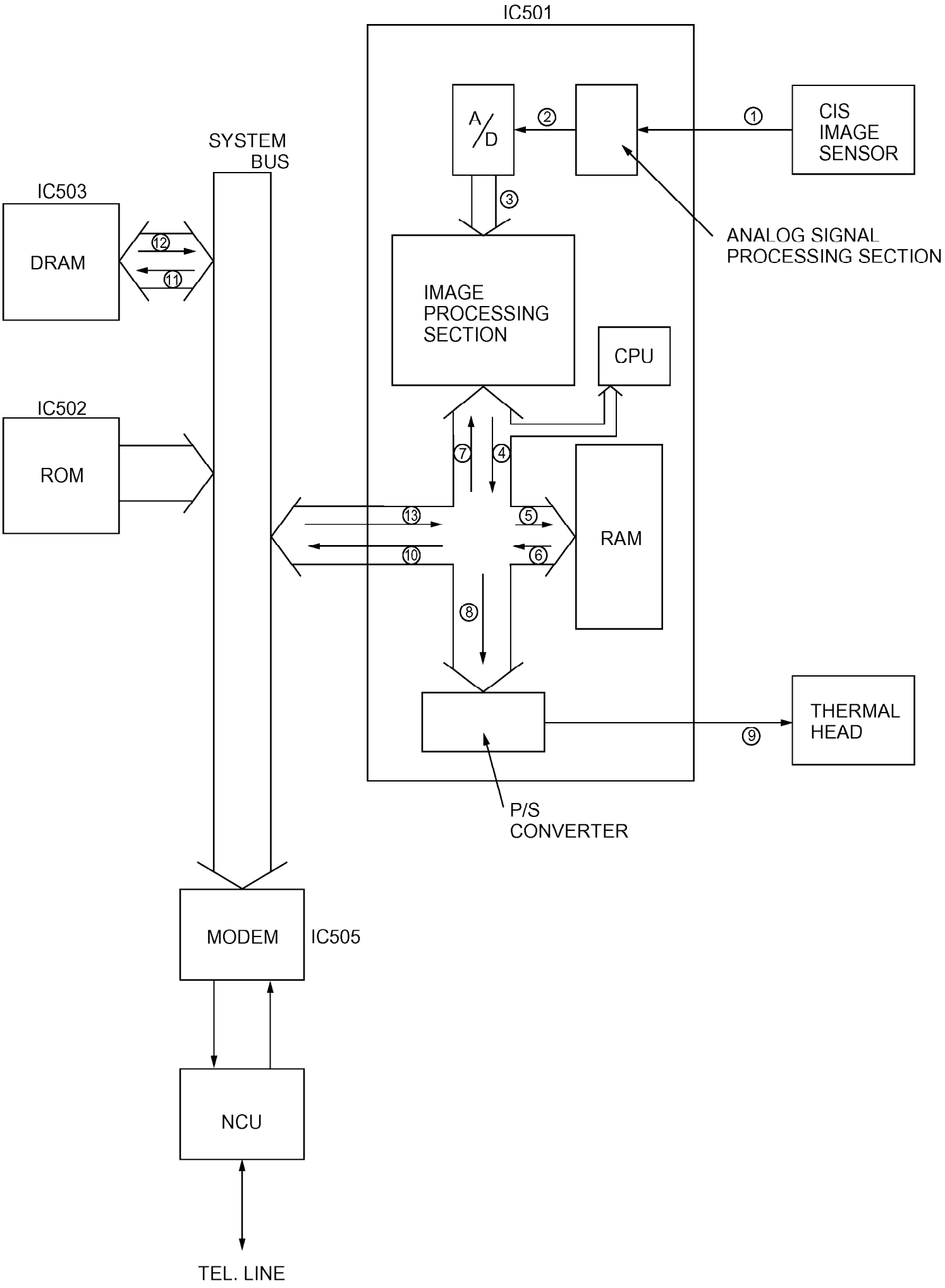
IC501
A/D
②
①
CIS
IMAGE
SENSOR
SYSTEM
BUS
IC503
③
DRAM
⑫
⑪
ANALOG SIGNAL
PROCESSING SECTION
IMAGE
PROCESSING
SECTION
CPU
IC502
ROM
⑦
④
⑬
⑤
RAM
⑩
⑥
⑧
THERMAL
HEAD
⑨
P/S
CONVERTER
MODEM
IC505
NCU
TEL. LINE

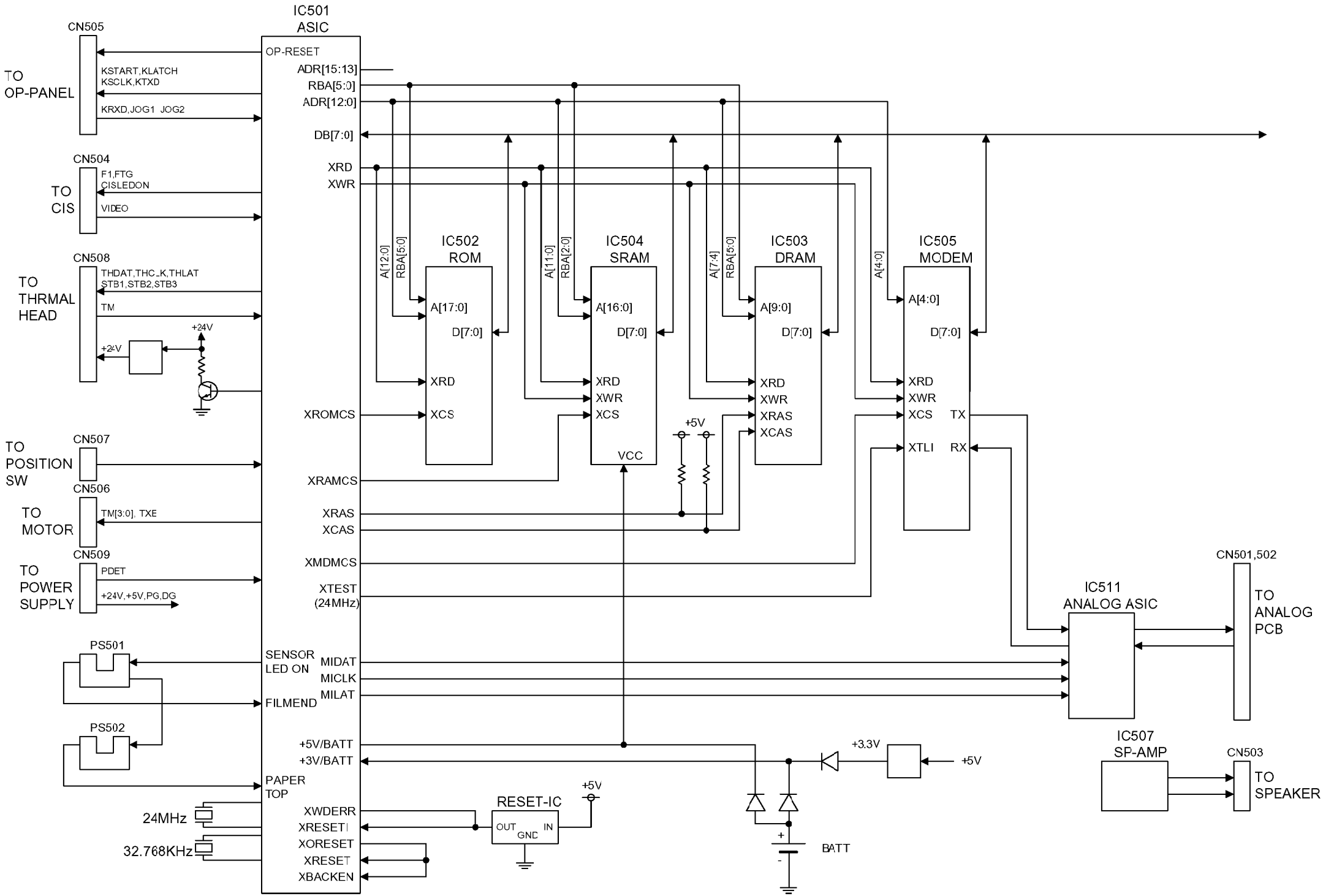
IC501
ASIC
CN505
TO
OP-PANEL
KSTART,KLATCH
KSCLK,KTXD
KRXD,JOG1 JOG2
OP-RESET
ADR[15:13]
RBA[5:0]
ADR[12:0]
DB[7:0]
XRD
XWR
CN504
TO
CIS
F1,FTG
CISLEDON
VIDEO
CN508
TO
THRMAL
HEAD
THDAT,THC_K,THLAT
STB1,STB2,STB3
TM
+24V
+24V
IC502
ROM
IC504
SRAM
IC503
DRAM
IC505
MODEM
A[12:0]
RBA[5:0]
A[11:0]
RBA[2:0]
A[7:4]
RBA[5:0]
A[4:0]
A[17:0]
D[7:0]
XRD
XCS
A[16:0]
D[7:0]
XRD
XWR
XCS
VCC
A[9:0]
D[7:0]
XRD
XWR
XRAS
XCAS
A[4:0]
D[7:0]
XRD
XWR
XCS
TX
XTLI
RX
XROMCS
+5V
CN507
TO
POSITION
SW
XRAMCS
CN506
TO
MOTOR
TM[3:0], TXE
XRAS
XCAS
CN509
TO
POWER
SUPPLY
PDET
+24V,+5V,PG,DG
XMDMCS
XTEST
(24MHz)
IC511
ANALOG ASIC
CN501,502
TO
ANALOG
PCB
PS501
SENSOR
LED ON
MIDAT
MICLK
MILAT
FILMEND
PS502
+5V/BATT
+3V/BATT
+3.3V
+5V
IC507
SP-AMP
CN503
TO
SPEAKER
PAPER
TOP
24MHz
32.768KHz
XWDERR
XRESETI
XORESET
XRESET
XBACKEN
RESET-IC
OUT
GND
IN
+5V
+
-
BATT

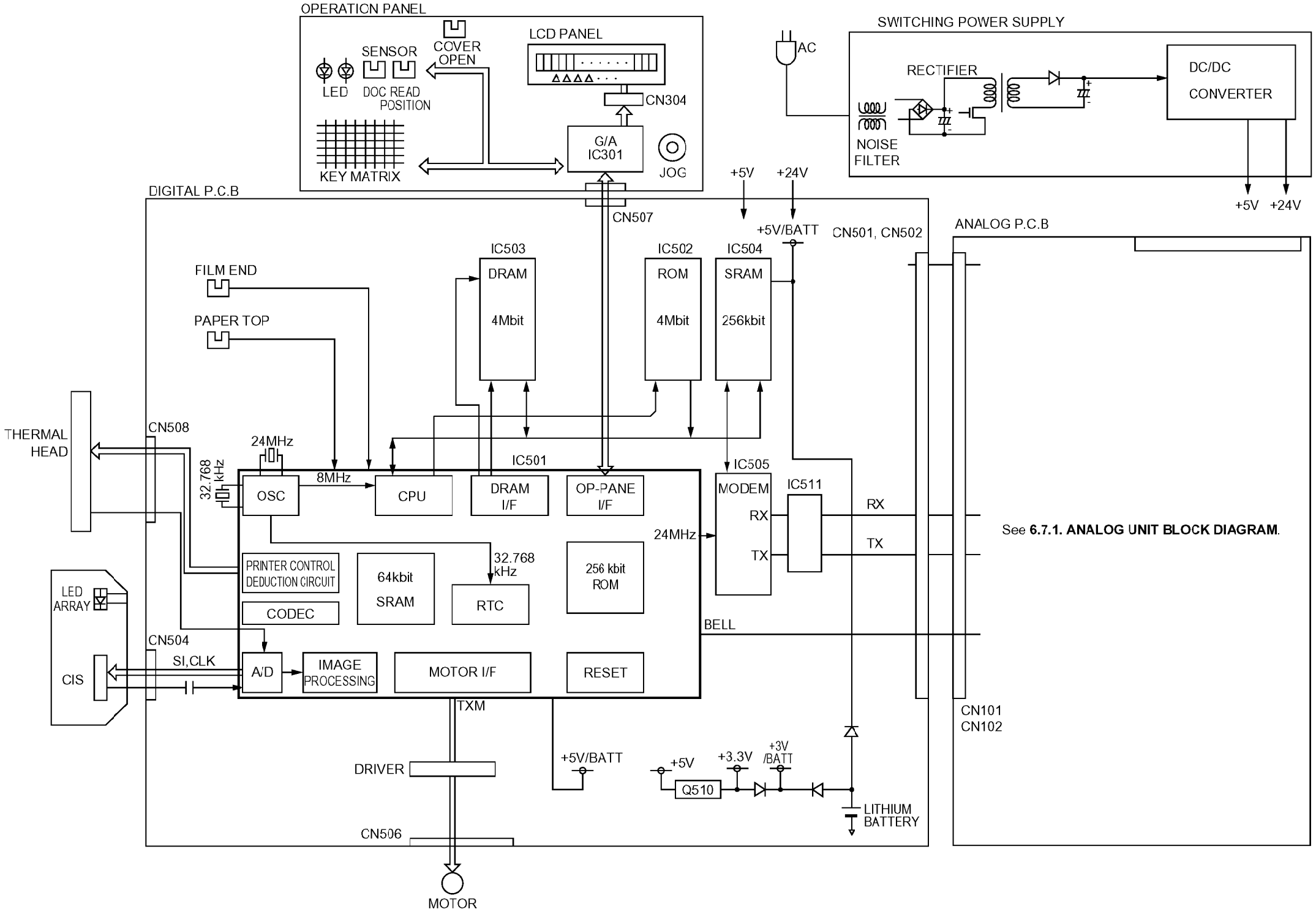
OPERATION PANEL
SENSOR
COVER OPEN
LCD PANEL
LED
DOC READ POSITION
CN304
KEY MATRIX
G/A IC301
JOG
SWITCHING POWER SUPPLY
AC
RECTIFIER
DC/DC CONVERTER
NOISE FILTER
+5V
+24V
DIGITAL P.C.B
CN507
+5V/BATT
CN501, CN502
ANALOG P.C.B
IC503
DRAM 4Mbit
IC502
ROM 4Mbit
IC504
SRAM 256kbit
FILM END
PAPER TOP
THERMAL HEAD
CN508
24MHz
32.768 kHz
IC501
OSC
8MHz
CPU
DRAM I/F
OP-PANE I/F
IC505
MODEM
IC511
RX
TX
24MHz
See 6.7.1. ANALOG UNIT BLOCK DIAGRAM.
PRINTER CONTROL DEDUCTION CIRCUIT
64kbit SRAM
32.768 kHz
RTC
256 kbit ROM
CODEC
BELL
LED ARRAY
CN504
SI,CLK
CIS
A/D
IMAGE PROCESSING
MOTOR I/F
RESET
TXM
DRIVER
+5V/BATT
+5V
+3.3V
+3V /BATT
Q510
LITHIUM BATTERY
CN506
CN101
CN102
MOTOR

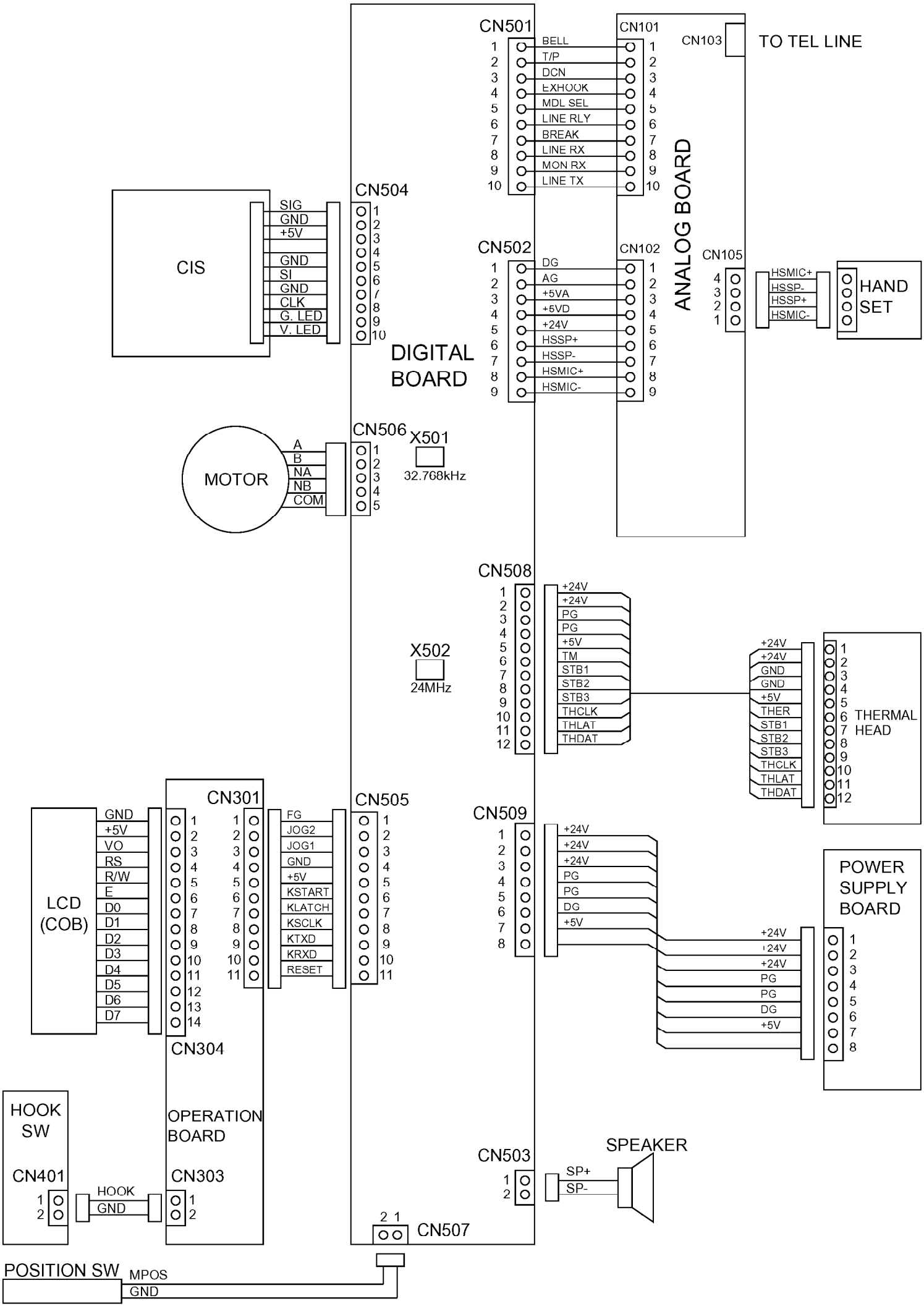
DIGITAL BOARD
ANALOG BOARD
CN501
CN101
CN103
TO TEL LINE
BELL
T/P
DCN
EXHOOK
MDL SEL
LINE RLY
BREAK
LINE RX
MON RX
LINE TX
CN502
CN102
DG
AG
+5VA
+5VD
+24V
HSSP+
HSSP-
HSMIC+
HSMIC-
CN105
HSMIC+
HSSP-
HSSP+
HSMIC-
HAND SET
CIS
SIG
GND
+5V
GND
SI
GND
CLK
G. LED
V. LED
CN504
MOTOR
A
B
NA
NB
COM
CN506
X501
32.768kHz
X502
24MHz
CN508
+24V
+24V
PG
PG
+5V
TM
STB1
STB2
STB3
THCLK
THLAT
THDAT
GND
GND
+5V
THER
STB1
STB2
STB3
THCLK
THLAT
THDAT
THERMAL HEAD
CN509
+24V
+24V
+24V
PG
PG
DG
+5V
POWER SUPPLY BOARD
LCD (COB)
GND
+5V
VO
RS
R/W
E
D0
D1
D2
D3
D4
D5
D6
D7
CN301
CN304
FG
JOG2
JOG1
GND
+5V
KSTART
KLATCH
KSCLK
KTXD
KRXD
RESET
CN505
OPERATION BOARD
HOOK SW
CN401
HOOK
GND
CN303
CN503
SPEAKER
SP+
SP-
2 1
CN507
POSITION SW
MPOS
GND

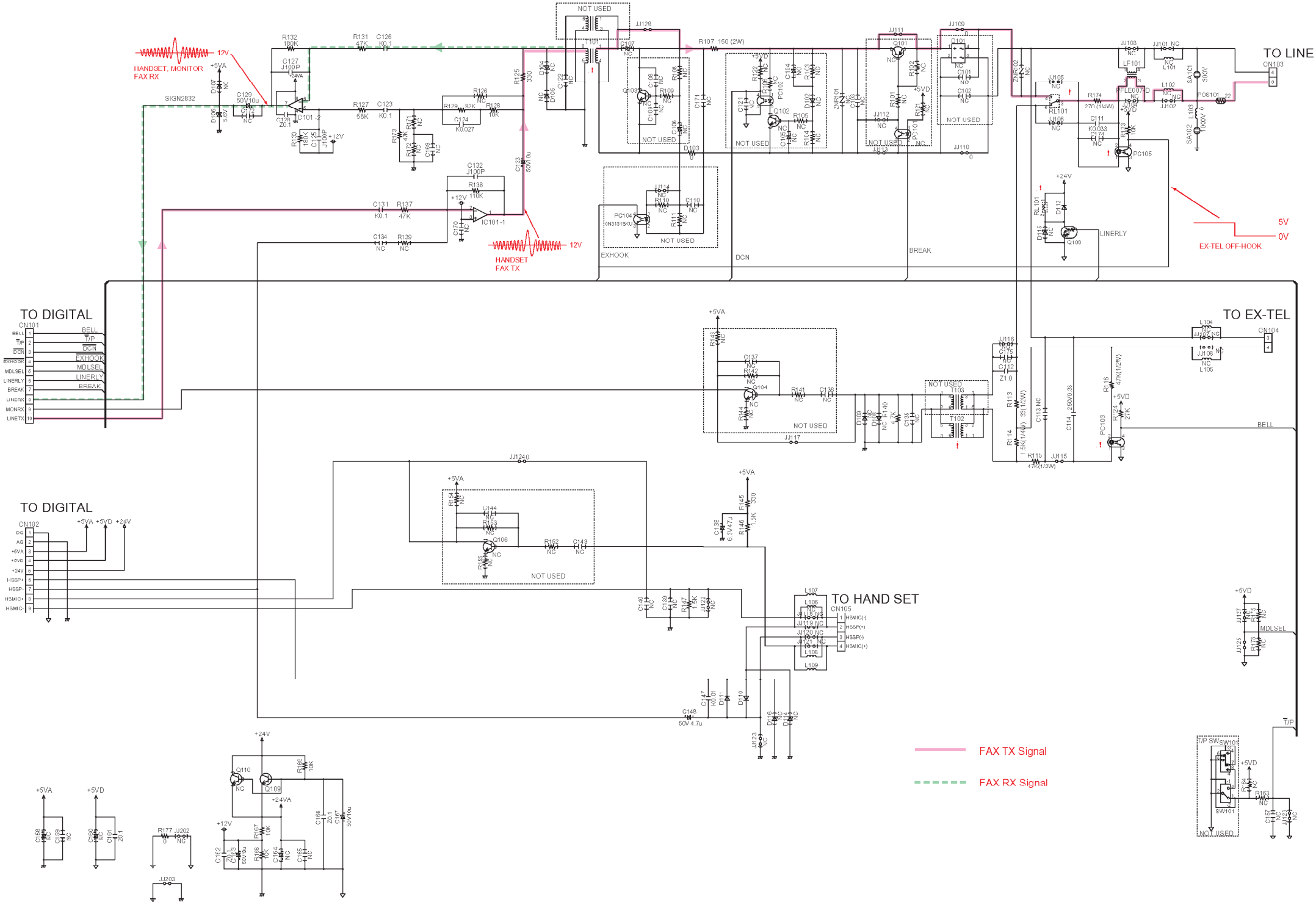
TO LINE
TO DIGITAL
TO DIGITAL
TO EX-TEL
TO HAND SET
HANDSET, MONITOR FAX RX
HANDSET FAX TX
EX-TEL OFF-HOOK
SIGN2832
EXHOOK
DCN
BREAK
LINERLY
BELL
MDLSEL
T/P
FAX TX Signal
FAX RX Signal

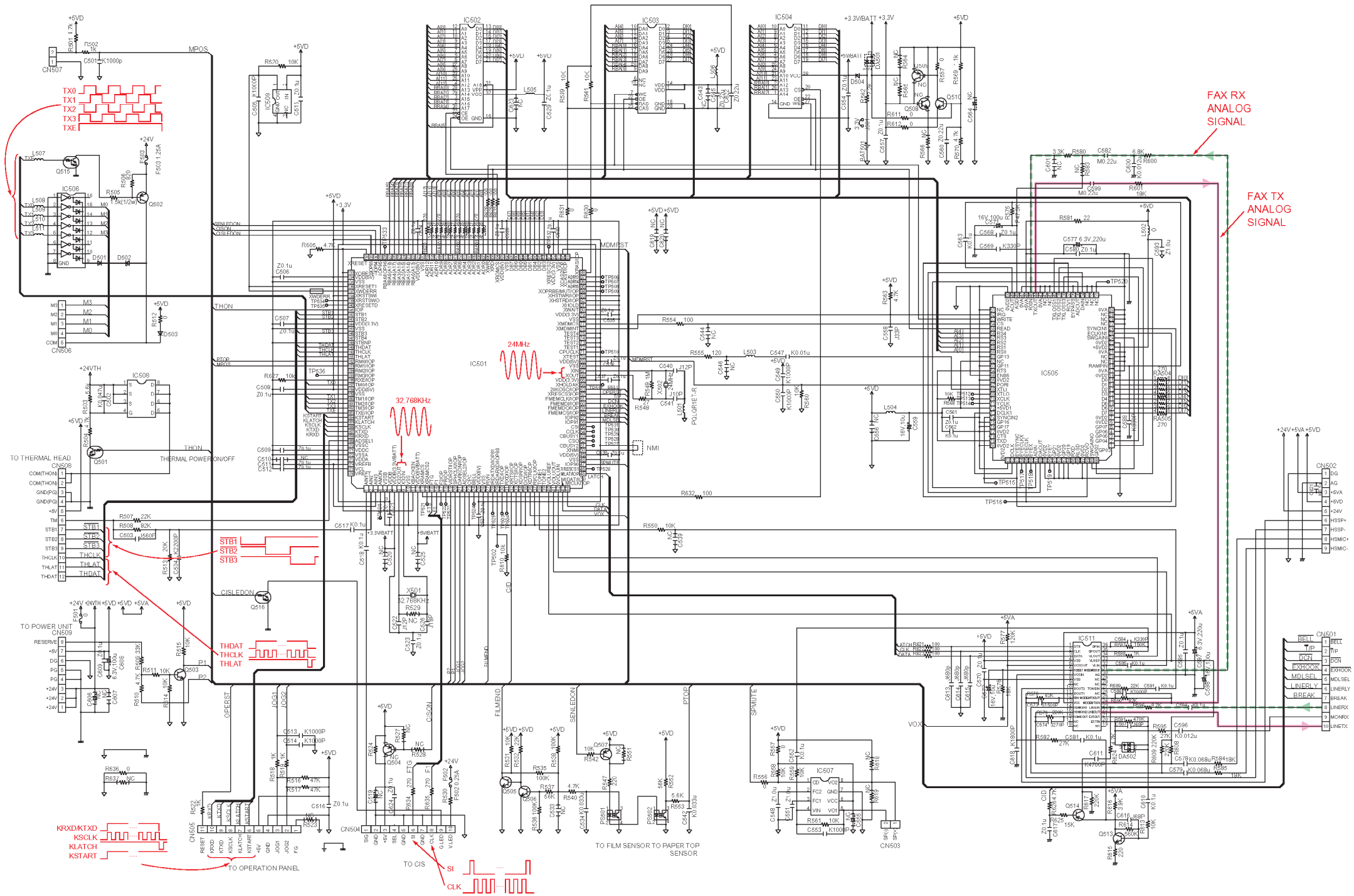

FAX RX ANALOG SIGNAL
FAX TX ANALOG SIGNAL
TX0
TX1
TX2
TX3
TXE
24MHz
32.768KHz
TO THERMAL HEAD
THERMAL POWER ON/OFF
TO POWER UNIT
STB1
STB2
STB3
THDAT
THCLK
THLAT
KRXD/KTXD
KSCLK
KLATCH
KSTART
TO OPERATION PANEL
TO CIS
SI
CLK
TO FILM SENSOR TO PAPER TOP SENSOR
IC501
IC502
IC503
IC504
IC505
IC506
IC507
IC508
IC509
IC511
CN501
CN502
CN503
CN504
CN505
CN506
CN507
CN508
CN509

(Component View)

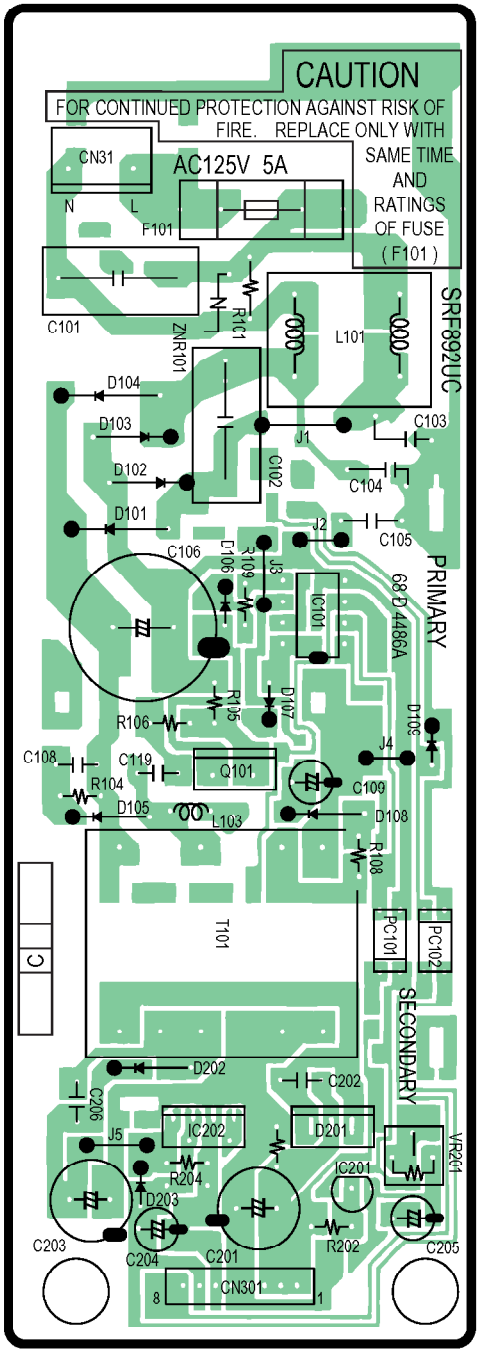

(Bottom View)

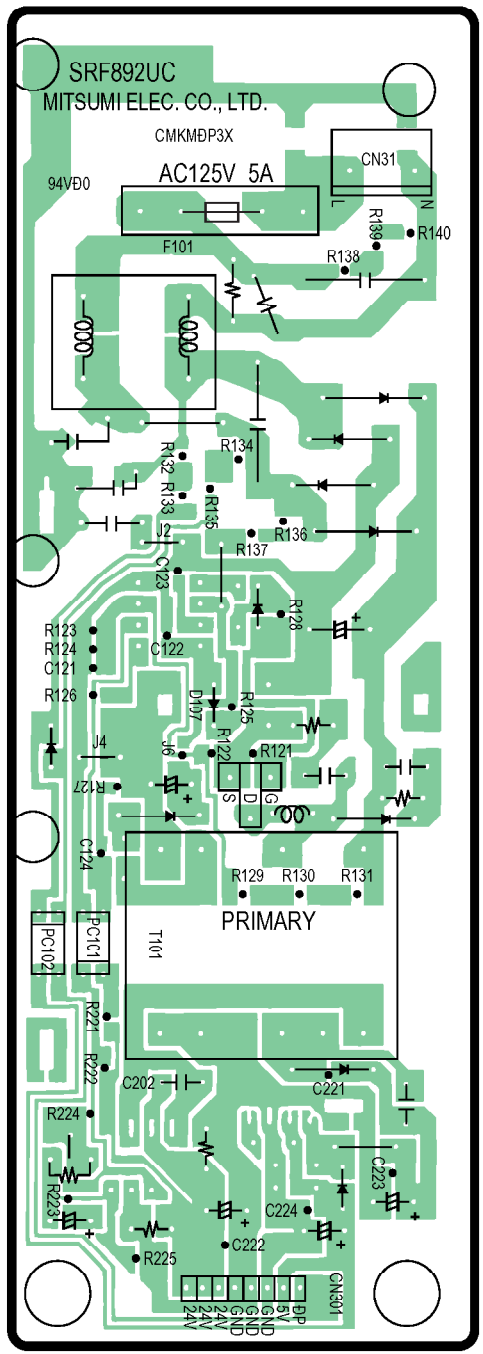

Pin No.	Waveform	Pin No.	Waveform
8, 9	32kHz	66, 67	24MHz

(Component View)

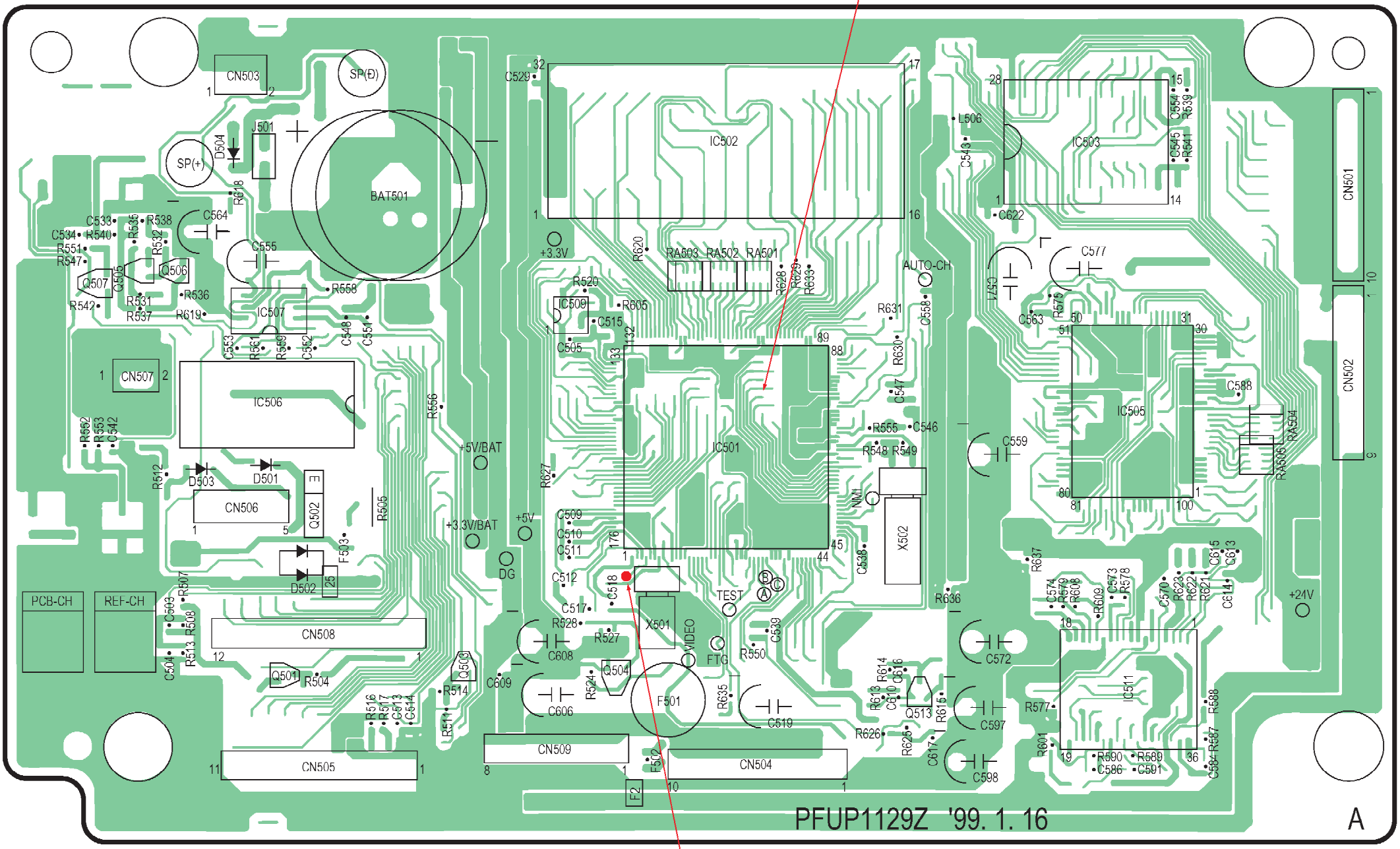

Test Point : Check the analog signal for scanning here with an oscilloscope.

(Bottom View)

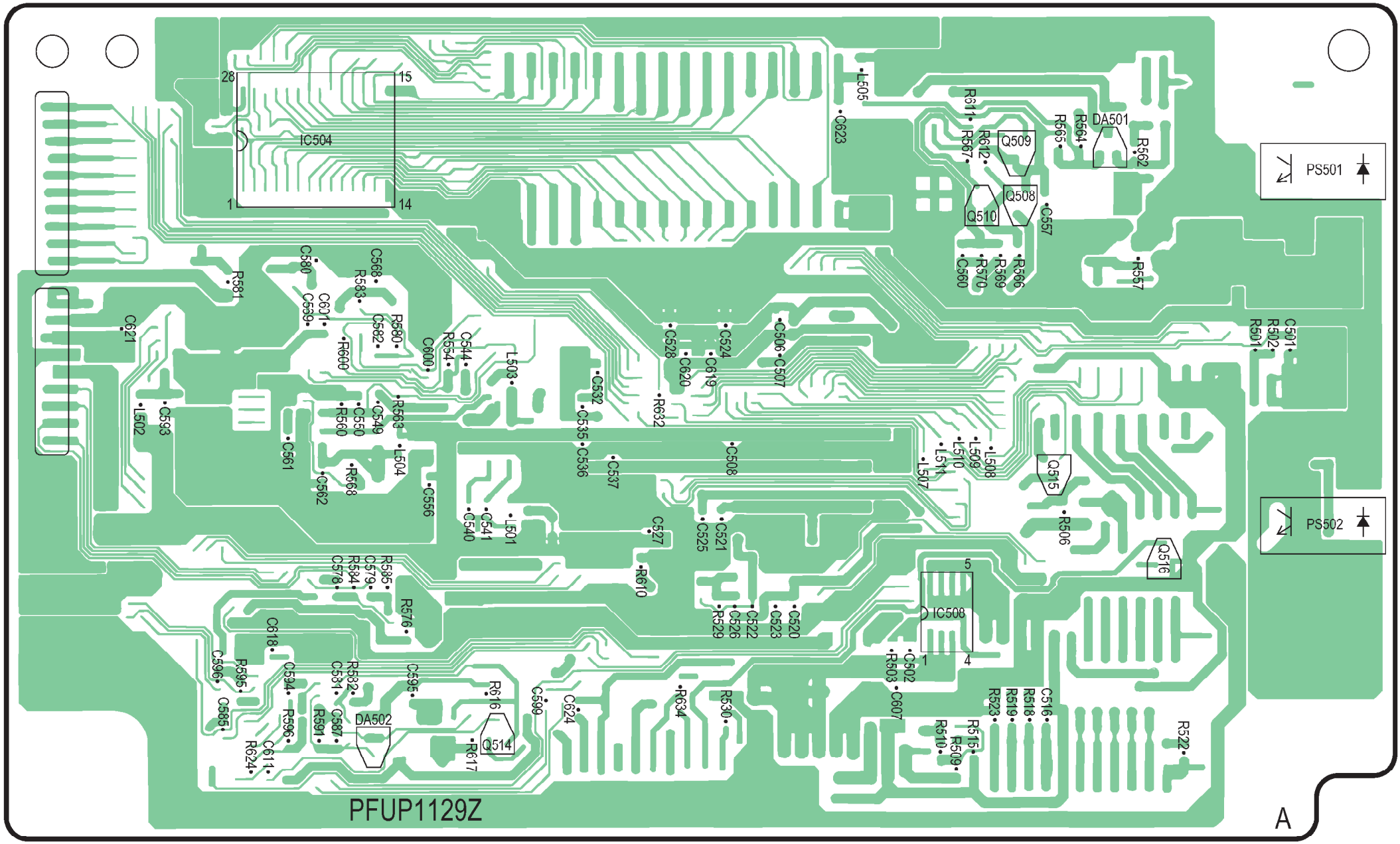

IC504
28
15
1
14
PS501
PS502
DA501
DA502
Q509
Q508
Q510
Q515
Q516
Q514
IC508
5
1
4
PFUP1129Z
A

(Bottom View)

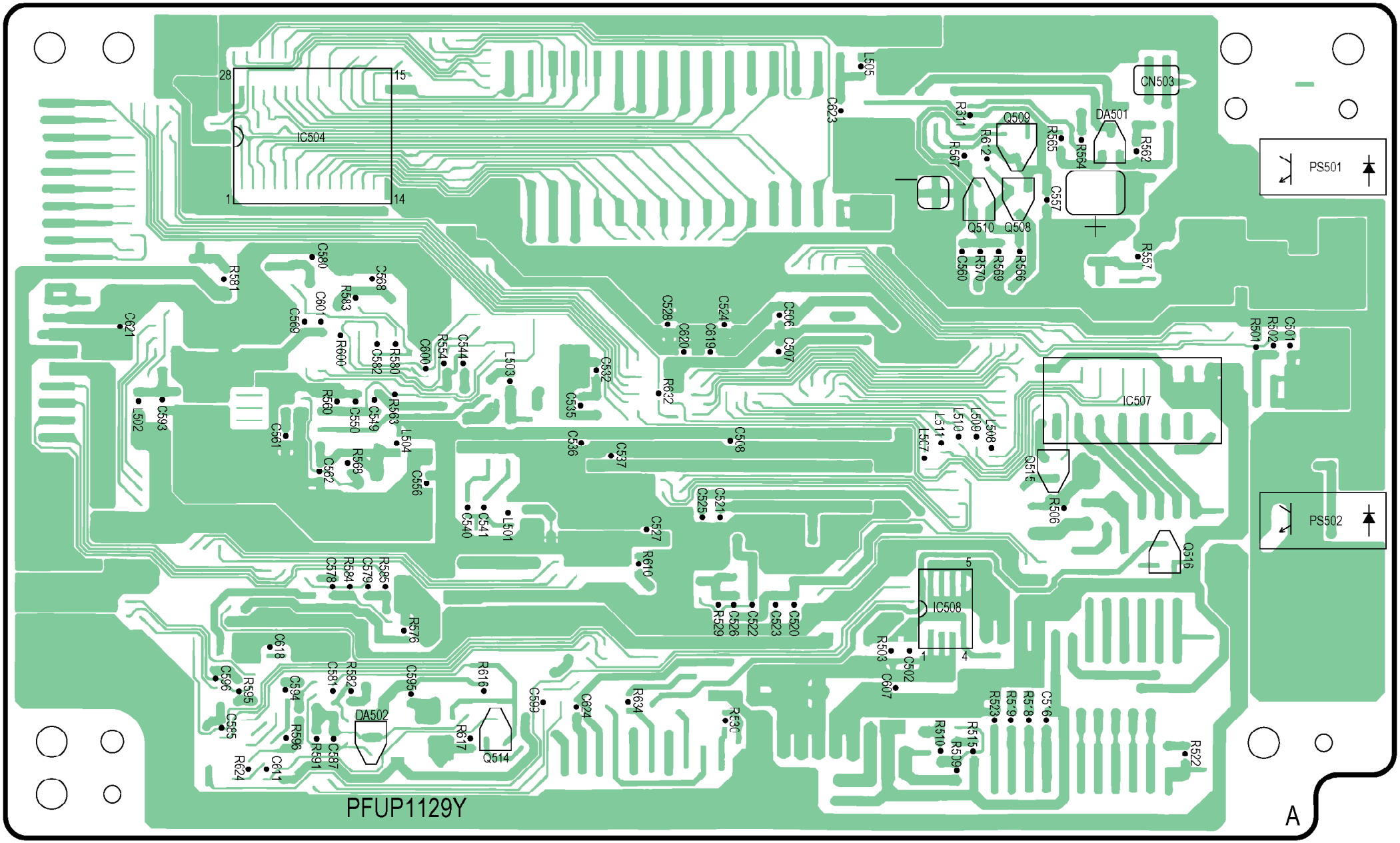

IC504
28
15
1
14
CN503
DA501
Q509
Q510
Q508
PS501
PS502
IC507
IC508
Q515
Q516
DA502
Q514
PFUP1129Y
A

(Component View)

Pin No.	Waveform	Pin No.	Waveform
8, 9	32kHz	66, 67	24MHz

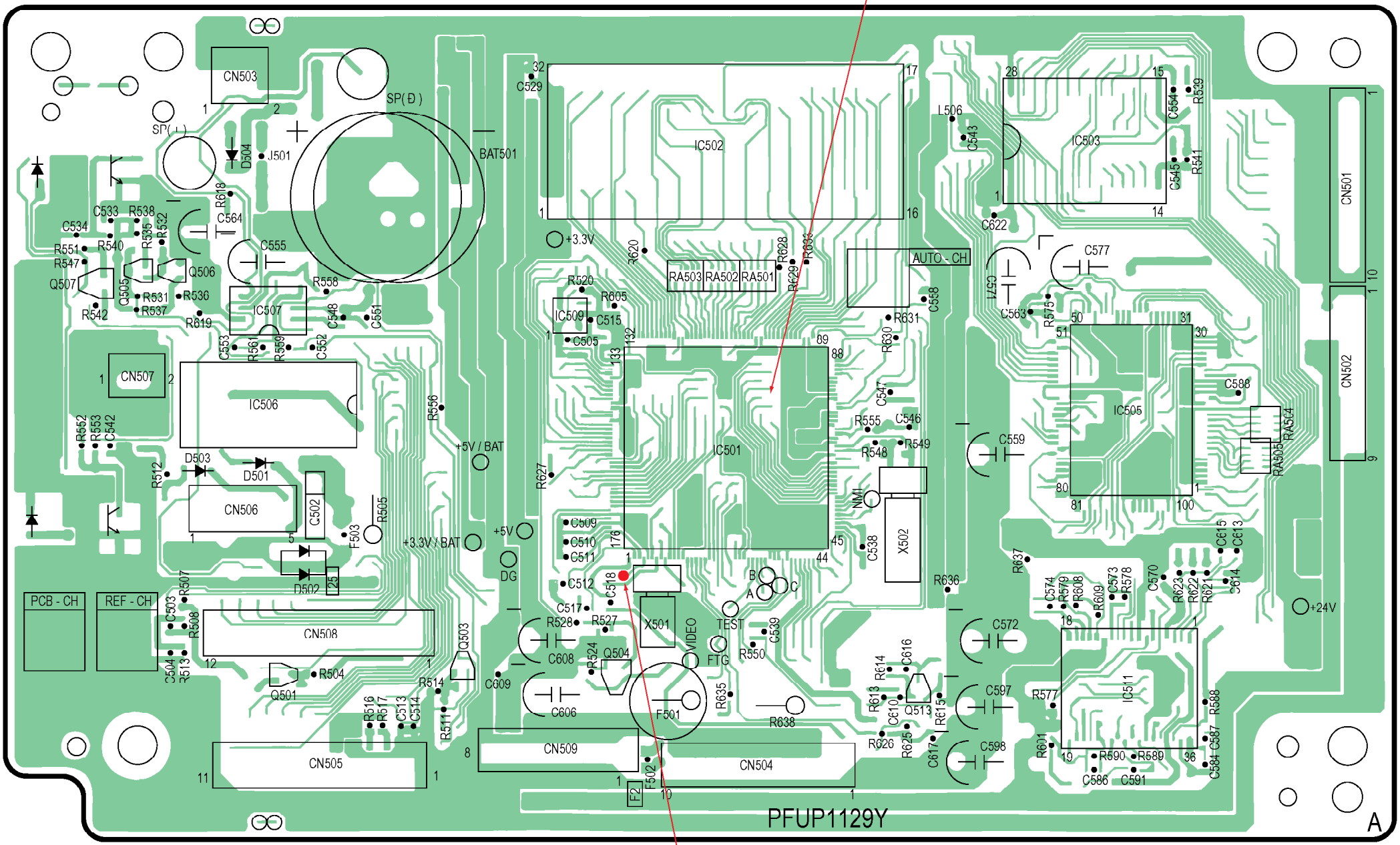

(Component View)

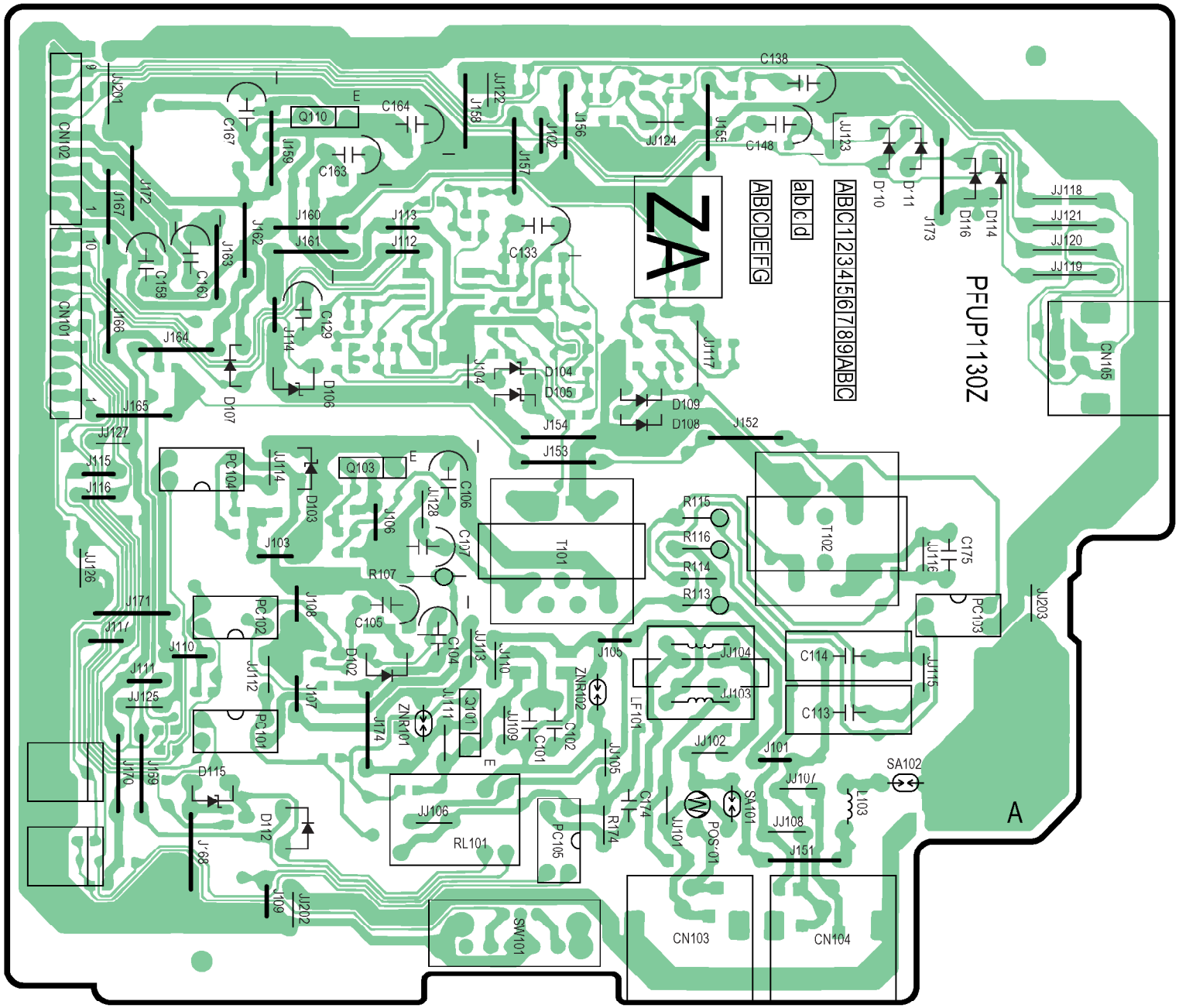

(Bottom View)

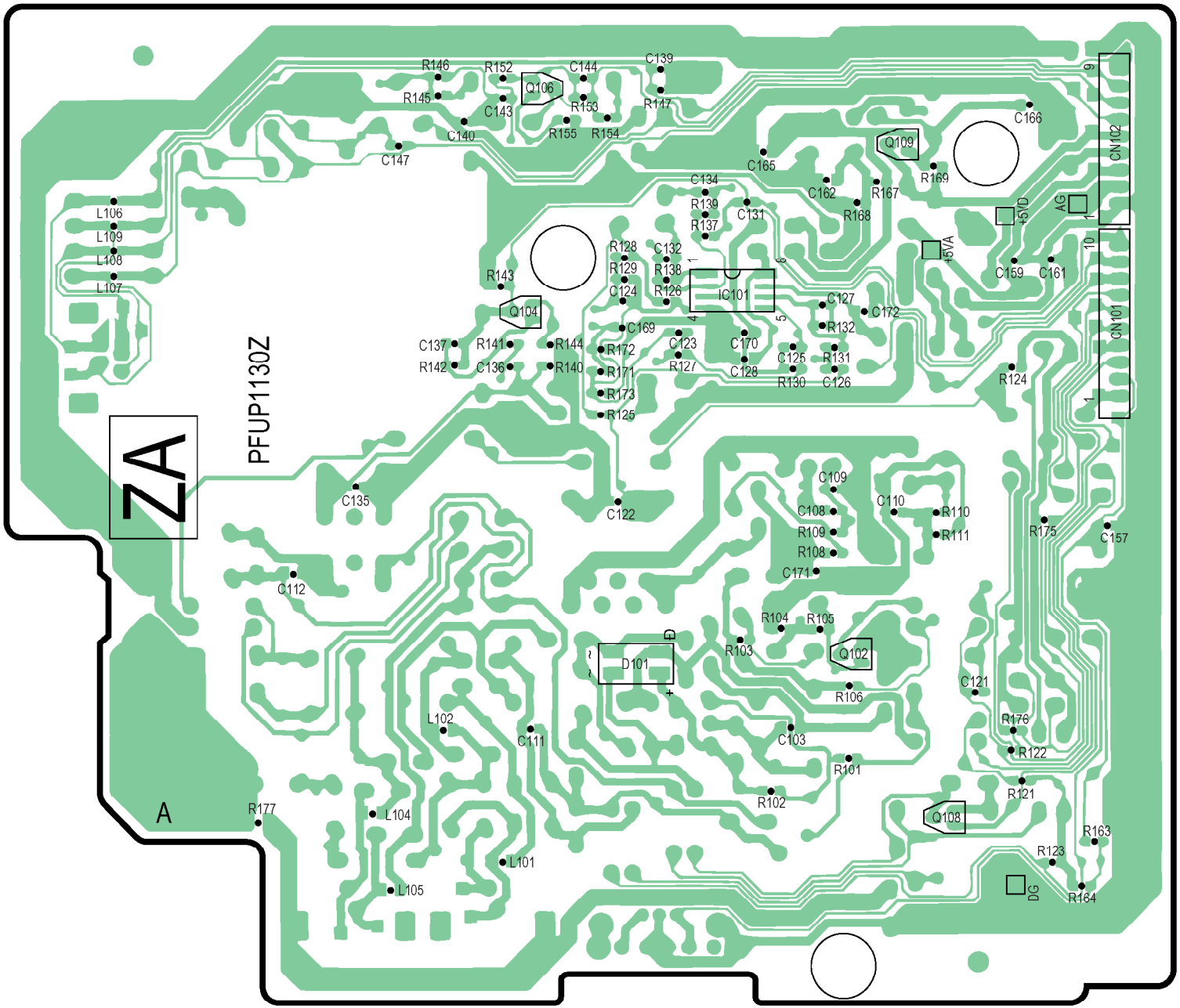
ZA
PFUP1130Z
A
R146
R152
Q106
C144
C139
R145
C143
R153
R147
C140
R155
R154
C147
C166
Q109
C165
R169
C134
C162
R167
R139
C131
R137
R168
L106
L109
L108
L107
R128
C132
R129
R138
R143
C124
R126
IC101
C127
C172
Q104
R132
C169
C137
R141
R144
C123
C170
C125
R131
R142
C136
R140
R172
R127
C128
R130
C126
R171
R124
R173
R125
C135
C122
C109
C108
C110
R110
R109
R111
R175
C157
R108
C171
C112
R104
R105
R103
Q102
D101
C121
R106
L102
C111
R176
C103
R122
R101
R121
R102
Q108
R177
L104
R163
L101
R123
L105
R164
CN102
CN101
+5VD
+5VA
AG
DG

(Component View)

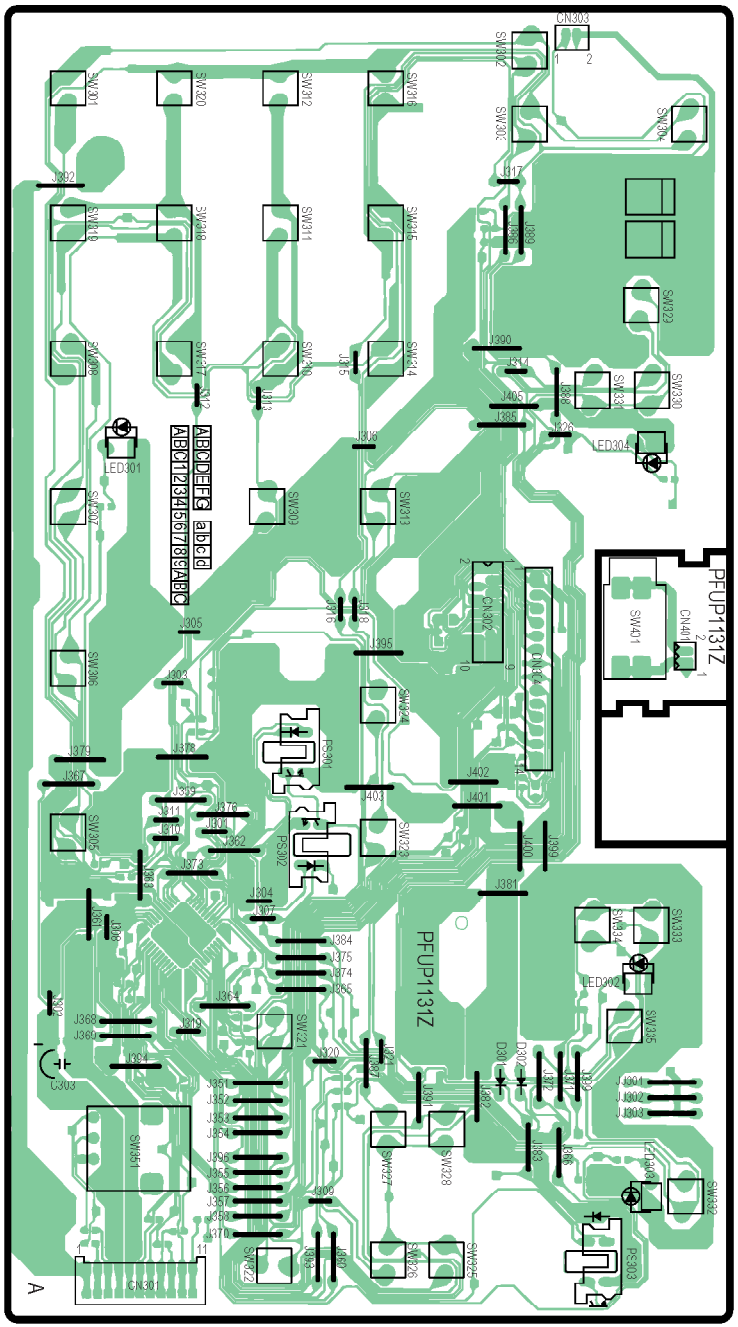

Pin No.	Waveform	Pin No.	Voltage
1, 3, 4 7~14 16, 20 42~44	5V 0V	37, 38	LED ON : 0V LED OFF : 5V
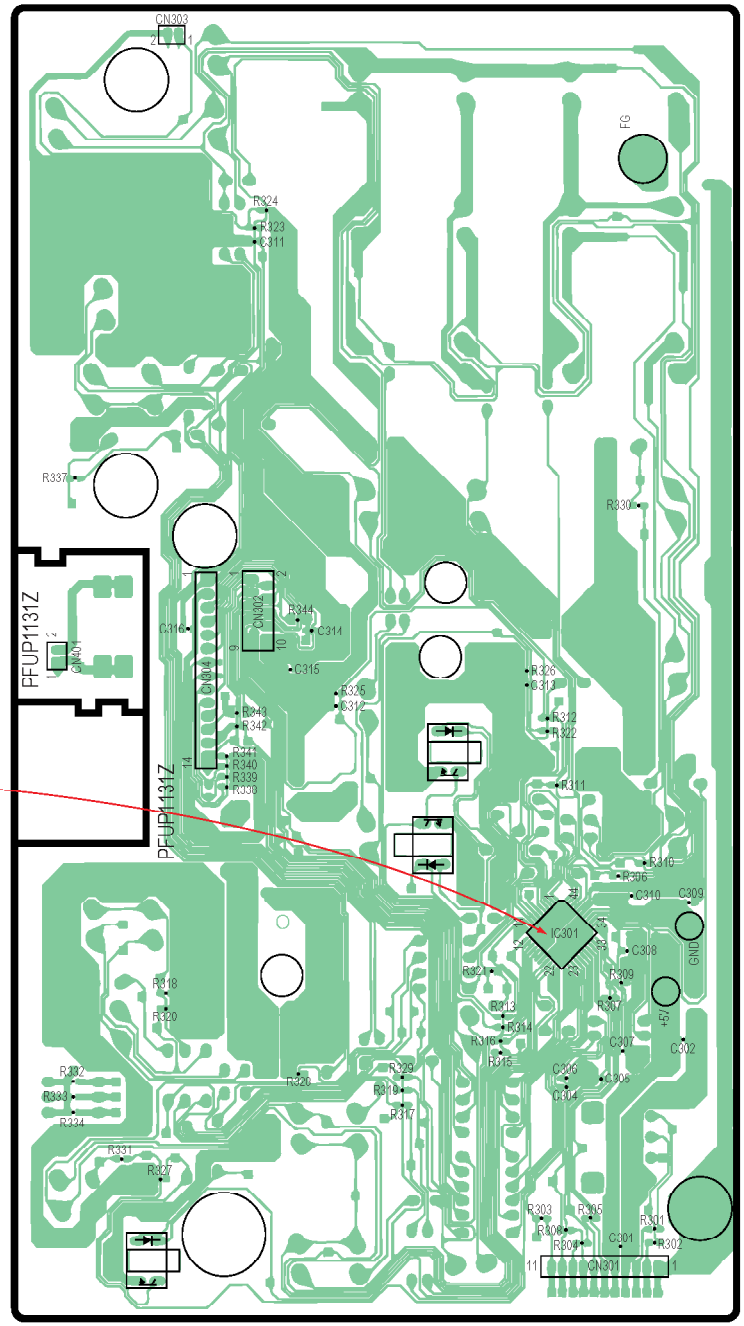
(Bottom View)